DRILL STAND 2812
Operating and Maintenance Instructions
Spare Parts List

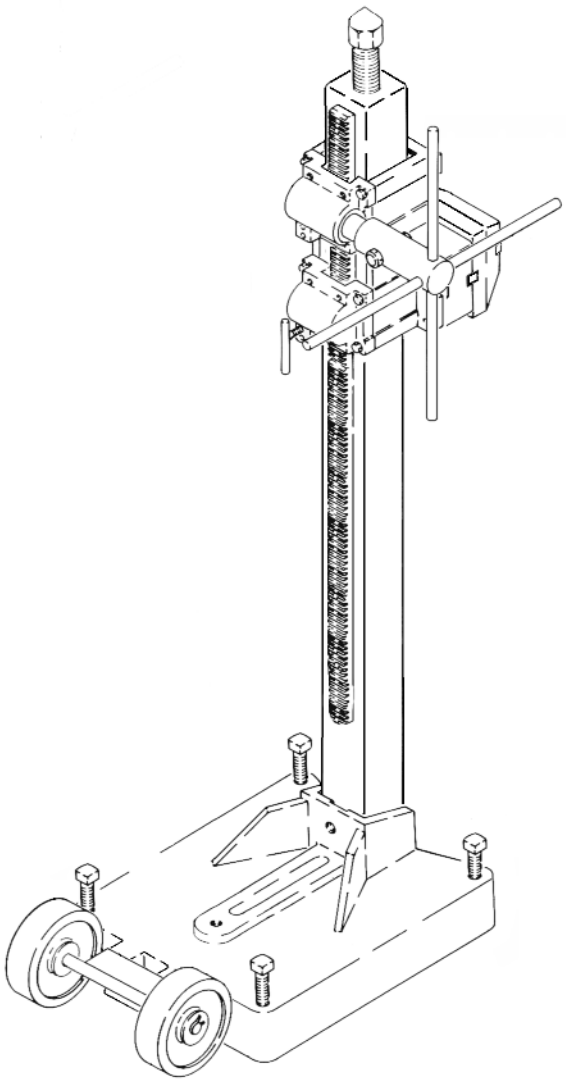

TARGET®

⚠ Warning

Some dust created by power sanding, sawing, grinding, drilling and other construction activities contains chemicals known to cause cancer, birth defects or other reproductive harm. Some examples of these chemicals are:

- Lead from lead-based paints,
- Crystalline silica from bricks and cement and other masonry products and
- Arsenic and chromium from chemically-treated lumber.

Your risk from these exposure varies, depending on how often you do this type of work. To reduce your exposure to these chemicals: work in a well ventilated area and work with approved safety equipment, such as those dust masks that are specially designed to filter out microscopic particles.

•REFER TO MANUAL•

Introduction

Congratulations on your selection of a Target 2812 Drill Stand. We are certain you will be pleased with your purchase of one of the finest drill stands on the market.

We want to help you get the best performance from your new machine and to operate it safely. This manual contains the information on how to do that. Please read this manual thoroughly, as it contains important information on operational safety, maintenance and suggestions on how to get the best performance from your Target 2812 Drill Stand.

Best Wishes
Target

A Few Words About Safety

The safe operation of mechanical equipment is a partnership between the manufacturer and the person who operates it. At Target we take this partnership very serious by designing our equipment to be the safest and the most reliable equipment available to do the job. To insure that both the performance and safety features of the equipment do the job, we work closely with our partners to develop and implement strong maintenance and operator training programs. From design, to manufacture, to operation, to maintenance, it truly is the partnership that keeps the equipment running smoothly, efficiently and most importantly, safely. Our equipment comes with a comprehensive manual that covers operation, maintenance, parts and safety instruction specific to the tool. Always read and fully understand all of the safety instructions given in the manual before operating the equipment.

Safety messages - A safety message informs you about potential hazards that could hurt you or others. Each safety message is preceded by one of the following three words: Danger, Warning or Caution.

⚠ Danger

You WILL be KILLED or SERIOUSLY INJURED if you don't follow instructions.

⚠ Warning

You CAN be KILLED or SERIOUSLY INJURED if you don't follow instructions.

⚠ Caution

You CAN be INJURED if you don't follow instructions.

Additional information as to the nature of the hazard is provided by the following hazards symbols which appear throughout the manual in conjunction with safety message alert symbols.

⚠ Caution

LOCK CARRIAGE TO COLUMN WHEN NOT IN USE BY TIGHTENING LOCK SCREW (26), PAGE 15.

MODEL 2812 ACCESSORIES ASSEMBLY INSTRUCTION

Assemble the Model 2812 Drill Stand as shown on page 14.

1. Attach Wheel Assembly (17) to Base (9 or 12), page 14, with capscrews and washers (14 and 15).
2. Thread Jack Screw (1) into top of Column.

VACUUM SYSTEM, SINGLE PAD CONFIGURATION

1. Screw Stud (7) all the way into the Vacuum Pad.
2. Place frame on the base with the stud protruding through the frame.
3. Thread Nut (1) on the Stud and tighten it securely.
4. Close Single-Pad Valve (11) and connect Hose Assembly (10) to the pad.

OPERATION

1. Set pad with gasket on floor and tighten Nut (1), page 16 to remove all slack.
2. Close Release Valve (15), page 17 and make sure Single Pad Valve (11) is open.
3. Connect vacuum pump motor to 115 VAC power source and turn switch on.
4. Read vacuum on gauge (1), page 17; the valve should be approximately 25 in. hg.

⚠ Caution

DO NOT ATTEMPT TO DRILL IF THE VACUUM DOES NOT REACH 20 INCHES HG ON THE GAUGE. DO NOT APPLY SO MUCH DRILLING PRESSURE THAT IT CAUSES THE RUBBER GASKETS ON THE PADS TO PULL AWAY FROM THE FLOOR.

MAINTENANCE

1. Ensure that electrical components are safe before each use (see pages 5, 6, 7 & 8).
2. Check all vacuum distribution fittings to make sure they are tight.
3. Replace worn pad gaskets; use 3M weatherstrip adhesive or equivalent.
4. Maintain vacuum pump in accordance with the Gast Parts List and Operating and Maintenance Instructions attached to pump.

VACUUM SYSTEM TROUBLESHOOTING

If the pump motor is running and the gauge indicates zero vacuum or low vacuum, check the following:

1. Release Valve (15), page 17, not closed.
2. Vacuum pad gasket damaged or pads not seating on floor surface properly.
3. Pump filter clogged.
4. Pump filter jar not tight against gasket or jar cracked.
5. Vacuum distribution fittings not tight.

SAFETY INSTRUCTIONS FOR ALL ELECTRIC POWERED DRILLS

⚠ Warning

WHEN USING ELECTRIC TOOLS, BASIC SAFETY PRECAUTIONS SHOULD ALWAYS BE FOLLOWED TO REDUCE THE RISK OF FIRE, ELECTRIC SHOCK AND PERSONAL INJURY INCLUDING THE FOLLOWING ITEMS. READ ALL INSTRUCTIONS AND SAVE THEM FOR FUTURE REFERENCE.

1. GROUND ALL TOOLS If the tool is equipped with a three prong plug, it should be plugged into a three hole electrical receptacle. If an adapter is used to accommodate a two hole receptacle, the grounding ear must be attached to a known ground. Never remove the third prong.

2. DON'T FORCE DRILL It will do the job better and safer at the rate for which it was designed.

3. WEAR PROPER APPAREL No loose clothing or jewelry to get caught in moving parts. Rubber gloves and insulated non-skid footwear are recommended when working out doors. Wear protective covering to contain long hair.

4. USE SAFETY GLASSES at all times.

5. DON'T ABUSE CORD Never carry the tool by its cord or yank it to disconnect from the receptacle. Keep cord from heat, oil and sharp edges.

6. DISCONNECT TOOLS When not in use; before servicing, when changing accessories such as bits, extension, etc.

7. GUARD AGAINST ELECTRIC SHOCK Prevent body contact with grounded surfaces such as pipes, radiators, ranges and refrigerator enclosure

8. REMOVE WRENCHES. Form a habit of checking to see that wrenches are removed from drill spindle and bit before turning it on.

9. MAINTAIN DRILL WITH CARE. Keep drill clean at all times for best and safest perform ance. Follow instructions for lubricating. Keep handles dry, clean and free of oil or grease. Inspect switches, tool cords and extension cords periodically and have them repaired if damaged. Check moving parts for alignment and binding as well as for breakage and improper mounting. Damaged parts should be repaired or replaced.

10. AVOID ACCIDENTAL STARTING. Don't carry a plugged-in drill with your finger on the switch. Be sure the switch is turned off before plugging in a drill. Do not use a drill if the switch does not turn it on or off.

11. WEAR EAR PROTECTORS when using for extended periods.

12. ACCESSORIES. The use of any accessories other than what is listed or recommended for this particular drill may be hazardous.

13. KEEP HANDS AWAY FROM CUTTING EDGES AND ALL MOVING PARTS.

14. USE INSULATED SURFACES. A double-insulated or grounded drill may be made live if the bit comes in contact with live wiring in a wall, floor, ceiling, etc. Always check the work area for live wires.

15. STAY ALERT. Watch what you are doing and use common sense. Do not operate drill when you are tired.

EXTENSION CORD CHART

When an extension cord is used, it should also be a 3 wire cord to permit proper grounding of the drill. As the distance from the supply outlet increases, heavier gauge extensions are required. The use of extension cords of inadequate size wire causes a serious drop in voltage, loss of power and possible motor damage. This table is based on limiting line voltage drop to 5 volts at 150% of rated amperes.

Ampere rating (on Nameplate)	0-2.00	2.10-3.4	3.5-5.00	5.10-7.0	7.10-12.0	12.1-16.0	16.1-20.0	
Ext. Cable Length				Wire Size				
25 Ft.	18	18	18	18	16	14	12	
50 Ft.	18	18	18	16	14	12	10	
75 Ft.	18	18	16	14	12	10	8	
100 Ft.	18	16	14	12	10	8	8	Not
150 Ft.	16	14	12	12	8	8	6	normally
200 Ft.	16	14	12	10	8	6	4	available
300 Ft.	14	12	10	8	6	4	4	as flexible
400 Ft.	12	10	8	6	4	4	2	extension
500 Ft.	12	10	8	6	4	2	2	cord.
600 Ft.	10	8	6	4	2	2	1	
800 Ft.	10	8	6	4	2	1	0	
1000 Ft.	8	6	4	2	1	0	0	

IF USING AN EXTENSION CORD OUTDOORS, BE SURE IT IS MARKED WITH THE SUFFIX “W-A” (“W” IN CANADA) TO INDICATE THAT IS IS ACCEPTABLE FOR OUTDOOR USE.

GROUNDING INSTRUCTIONS

This drill should be grounded while in use to protect the operator from electric shock. The drill is equipped with an approved three-conductor cord and three-prong, grounding-type plug to fit the proper grounding-type receptacle. The green conductor in the cord is the grounding wire. Never connect the green wire to a live terminal.

NOTE: RECEPTACLE MUST BE GROUNDED FOR SAFE USE OF ADAPTER: IF IN DOUBT CALL A QUALIFIED ELECTRICIAN AND HAVE THE RECEPTACLE CHECKED FOR GROUND.

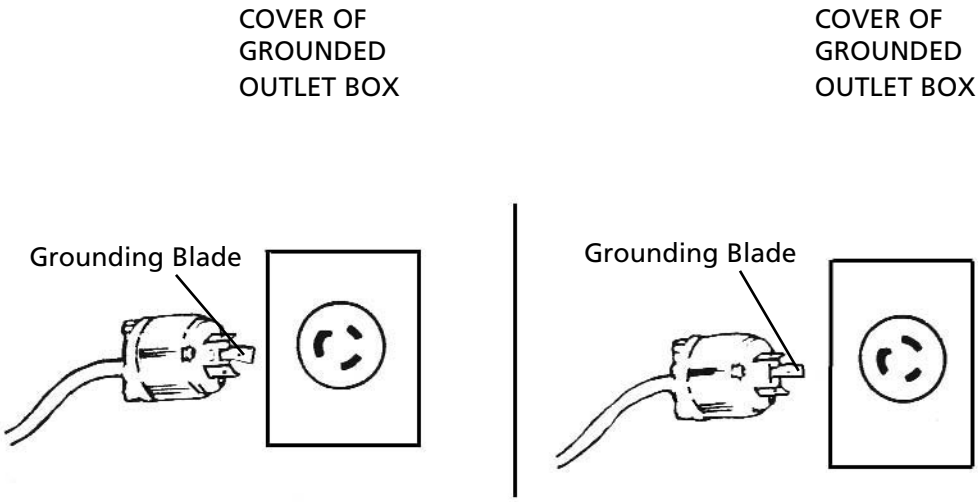

NEMA
L5-20
PLUG AND RECEPTACLE
FIGURE A

NEMA
L6-20
PLUG AND RECEPTACLE
FIGURE B

To connect twist locking plugs like those shown in figures A and B, insert the plug into a matching outlet. When the plug is fully inserted, turn it clockwise until it locks. This prevents the plug from being pulled out accidentally. To remove the plug, twist it counterclockwise to unlock it and remove it from the outlet.

Drill Stand Parts List

Part No.	Description	Qty.
541 40 05-62 HU (100A)	Carriage Assembly Red, with Handles	1
541 40 38-92 D (100A)	Carriage Assembly Blue, with Handles	1
541 40 05-06 HU (110A)	Carriage Body, Red	1
541 40 38-78 D (110A)	Carriage Body, Blue	1
541 40 05-05 (111)	Long Wear Plate	2
541 40 22-57 (C274)	Screw, Brass Flat Head 8-32 x 5/16"	10
541 40 04-98 (113)	Key, 1/2 x 1/2 x 6"	1
541 40 37-76 (C275)	Screw, Flat Head, 8-32NC x 3/4"	1
541 40 04-71 HU (120A)	Pinion Bracket Assembly	1
541 40 38-86 D (120A)	Pinion Bracket Assembly	1
541 40 04-62 HU (121A)	Pinion Bracket Body	1
541 40 38-76 D (121A)	Pinion Bracket Body	1
541 40 04-59 (122B)	Pinion Gear w/Retaining Ring Groove	1
541 40 04-58 (123)	Short Wear Plate	4
541 40 37-84 (C228)	Setscrew Socket Head, 1/4-20 x 3/4"	8
541 40 36-43 (C287)	Hex Key, 1/8"	1
541 40 37-91 (C175)	Capscrew, Bracket Mtg. 5/16-18 x 1-1/4"	8
541 20 52-40 (C59)	Lock Washer, 5/16"	8
541 40 04-57 (127)	Large Bronze Bearing	1
541 40 04-56 (128)	Small Bronze Bearing	1
541 40 14-72 (295)	Retaining Ring, Pinion	1
541 40 04-47 HU (130A)	Lower Bracket Assembly	1
541 40 38-87 D (130A)	Lower Bracket Assembly	1
541 40 04-41 HU (131A)	Lower Bracket Body	1
541 40 38-77 D (131A)	Lower Bracket Body	1
541 40 04-40 (132)	Lock Screw	1
541 40 04-13 (139)	Spacer Block, 2"	1
541 40 04-11 (142)	Handle Rod, 8"	4
541 40 25-13 (144)	Hub	1
541 40 37-82 (C253)	Bolt, Hub Mtg., 1/2-13 x 2-1/4"	1
541 40 37-81 (C254)	Lock Nut, Thin 1/2-13	1
541 40 25-74 (158C)	Column, 42"	1
541 40 24-73 (159A)	Rack, 42" Column, Weld Type	1
541 40 11-37 (165)	Jackscrew, 1-1/4 - 7	1
541 40 12-40 (170)	Motor Mounting Adapter Assembly	1
541 40 12-77 (171)	Key, 3/8 x 3/8 x 4"	1
541 40 12-83 (172)	Adapter Body	1
541 40 37-71 (C341)	Capscrew, Motor Mtg. 1/4-28 x 1"	4
541 40 37-89 (C2)	Capscrew, Adapter Mtg. 3/8-16NC x 1-1/2"	4
541 40 37-74 (C294)	Capscrew, Motor Mtg. 1/4-20NC x 1"	4

Drill Stand Parts List

Part No.	Description	Qty.
541 40 12-32 HU (180)	Narrow Base Assembly	1
541 40 38-95 D (180)	Narrow Base Assembly	1
541 40 35-19 (C490)	Leveling Screw, 3/4-10NC x 4"	4
541 40 11-36 HU (184A)	Large Base Assembly - Combination Anchor/Vacuum	1
541 40 38-97 D (184A)	Large Base Assembly - Combination Anchor/Vacuum	1
541 40 11-26 (187A)	Wheel Assembly, Large Base & Narrow Base	1
541 40 00-64 (188)	Angle Bracket, Column to Base	1
541 40 11-23 (189A)	Axle Bracket, Large Base & Narrow Base	1
541 40 37-31 (C8)	Bolt, Hex Head, 1/2-13 x 1"	2
541 40 37-98 (C10)	SAE Washer, 1/2"	2
541 40 11-07 (195A)	Column, 60"	1
541 40 11-05 (197A)	Column, 72"	1
541 40 17-91 (752008)	Wheel, 5"	2
541 40 35-23 (C46)	Cotter Pin, 1/8 x 1"	4
541 40 22-37-(C48)	Washer, 5/8"	4
	VACUUM ASSEMBLY	
541 40 14-25 (302)	Cross Bar	1
541 40 14-05 (303)	Pad Stud, 3/4-10 x 8"	1
541 40 37-48 (304)	Nut, Pad Stud, 3/4-10	1
541 40 19-32 (310)	Vacuum Pad with Gasket	1
541 40 19-30 (311)	Pad Gasket	1
541 40 19-01 (312)	Quick Disconnect Stem, 1/4 NPT	1
541 40 18-99 (313)	Pipe Plug, 1/4 NPT	1
541 40 00-57 (330)	Single Pad Vacuum System	1
541 40 00-55 (340)	Dual Pad Vacuum System	1
541 40 16-07 (406)	Vacuum Pump, w/Fittings	1
541 40 16-02 (407)	Vacuum Pump, Gast #DOAV111-AA	1
541 40 15-96 (408)	Water Trap	1
541 40 15-92 (409)	Pump Frame	1
541 40 15-90 (410)	Vacuum Pump, 220/240 Volt	1
541 40 15-08 (441)	Hose Assembly, Pad	2
541 40 14-95 (445)	Valve, Vacuum Release 1/4 NPT	1
541 40 14-93 (446)	Valve, Single Pad, 1/4"	1
541 40 14-91 (447)	Vacuum Gauge	1
541 40 24-23 (A41)	Close Nipple, 1/4 NPT	4
541 40 24-22 (A42)	Tee, 1/4 NPT	3
541 40 23-58 (A602)	Ell, 1/4 NPT	1
541 40 23-59 (A636)	Nipple, 1/4 x 7 NPT	1
541 40 37-85 (C223)	Capscrew, 10-32 x 1/2"	4

Drill Stand Parts List

Part No.	Description	Qty.
	VACUUM ASSEMBLY - COMBO BASE	
541 40 00-77 (752225)	Vacuum Pump w/Fittings and Slot Cap	1
541 40 16-02 (407)	Vacuum Pump Only	1
541 40 16-40 (752226A)	Bracket, Pump to Base	1
541 40 24-23 (A41)	Nipple 1/4 x Close Pipe	3
541 40 15-96 (408)	Water Trap	1
541 40 24-22 (A42)	Tee, 1/4 Pipe	2
541 40 16-35 (752227)	Hose, Pump to Slot Cap	1
541 40 14-91 (447)	Vacuum Gauge	1
541 40 14-95 (445)	Release Valve	1
541 40 16-56 (752221)	Gasket, Combo Base	1
541 40 16-51 HU (752222)	Slot Cap	1
541 40 39-27 D (752222)	Slot Cap	1
541 40 16-46 (752223)	Gasket, Slot Cap	1
541 40 37-85 (C223)	Capscrew, Bracket to Pump, 10-32 x 1/4"	4
541 40 37-31 (C8)	Bolt, Bracket to Base, 1/2-13 x 1"	1
541 40 37-98 (C10)	SAE Washer, 1/2"	1
	SWITCHBOX ASSEMBLY	
541 40 10-37 (223)	Receptacle, 20A, Single	1
541 40 36-77 (227)	Strain Relief	1
541 40 10-18 (229)	Switch, Motor	1
541 20 19-11 (230)	Boot, Auxiliary Switch	1
541 40 10-03 (237)	Boot, Motor Switch	1
541 40 09-99 (238)	Switch Plate	2
541 20 19-07 (248)	Ammeter, 0-30A	1
541 40 14-46 (473)	Mounting Bracket, 2812 Carriage	1
541 40 14-44 (474)	Clip - Male Dovetail	1
541 40 14-42 (475-1)	Box - Front	1
541 40 14-40 (475-2)	Box - Back	1
541 40 14-38 (476)	Receptacle, 15A, Single	1
541 40 10-35 (225)	Plug, 20A, Twist Lock	1
541 40 16-08 (30622)	Switch, Auxiliary	1
541 40 37-94 (C139)	Lock Nut, 1/4-20	2
541 40 22-70 (C231)	Capscrew, Socket 1/4-20 x 1/2"	2
541 40 36-15 (C255)	Jam Nut, 1/2-20	1
541 40 37-67 (C375)	Capscrew, Button Head 10-32 x 1/4"	4
541 40 37-66 (C376)	Capscrew, Button Head 6-32 x 3/8"	2
541 40 37-64 (C378)	Capscrew, Button Head 8-32 x 3/8"	2
541 40 36-14 (C383)	Jumper, Switch	1

Drill Stand Parts List

Part No.	Description	Qty.
	ANGLE BRACKET ASSEMBLY	
541 40 00-62 (105)	Angle Bracket Assembly	
541 40 05-40 (106)	Upper Backstay Bracket	1
541 40 16-94 (752051)	Lower Backstay Bracket	1
541 40 16-88 (752052)	Lower Backstay	1
541 40 16-83 (752053)	Upper Backstay	1
541 40 16-77 (752054)	Backstay Jam Nut	1
541 40 16-66 (752056)	Adapter - Upper Backstay Rod	1
541 40 37-98 (C10)	SAE Washer, 1/2"	2
541 40 37-88 (C20)	Lock Nut, 3/8-16	1
541 40 37-35 (C70)	SAE Washer, 5/8"	2
541 40 37-34 (C71)	Lock Nut, 5/8-11	2
541 40 37-32 (C79)	Bolt, Hex Head, 3/8-16 x 1-1/4"	1
541 40 37-77 (C273)	Bolt, Hex Head, 1/2-13 x 1-1/4"	2
541 40 35-91 (C442)	Bolt, Hex Head, 5/8-11 x 2-1/4"	1
541 40 35-92 (C497)	Bolt, Hex Head, 1-1/4-7 x 1-1/2"	1
541 40 35-93 (C498)	SAE Washer, 1-1/4"	1
541 40 35-94 (C499)	Bolt, Hex Head, 5/8-11 x 4-1/4"	1
	OPTIONAL ROLLER CARRIAGE	
541 40 15-07 HU (250A)	Roller Carriage Assembly	1
541 40 38-91 D (250A)	Roller Carriage Assembly	1
541 40 15-35 HU (258)	Carriage Body	1
541 40 38-42 D (258)	Carriage Body	1
541 40 04-98 (113)	Key	1
541 40 37-76 (114)	Machine Screw	1
541 40 15-23 (254A)	Bearing, Carriage Body Roller	4
541 40 15-25 (255)	Carriage Roller Assembly with Bearing	2
541 40 15-22 (256)	Roller Shaft, Carriage Body	2
541 40 22-75 (C219)	Setscrew 10-24 x 3/8"	2
541 40 37-32 (C79)	Bolt, 5/8-16 x 1-1/4"	4
541 40 15-51 (268)	Side Roller Housing	4
541 40 15-44 (262)	Shaft, Side Roller	4
541 40 15-41 (264A)	Bearing, Side Roller	8
541 40 15-38 (265)	Side Roller Assembly with Bearing	4
541 40 15-57 (269)	Rubber Spacer - Side Roller	4
541 40 37-60 (C385)	Setscrew 1/4-20 x 1/2"	4
541 40 36-25 (C422)	Capscrew 10-24 x 3/4"	16

Drill Stand Parts List

Part No.	Description	Qty.
	OPTIONAL ROLLER CARRIAGE - Cont'd.	
541 40 15-64 HU (270)	Upper Roller Housing Assembly	1
541 40 38-88 D (270)	Upper Roller Housing Assembly	1
541 40 15-62 HU (271)	Housing Only	1
541 40 38-79 D (271)	Housing Only	1
541 40 15-46 (272)	Eccentric Roller Adjuster	4
541 40 15-40 (274A)	Bearing, Roller	4
541 40 15-37 (275)	Adjustable Roller Assembly with Bearing	4
541 40 15-33 (276)	Shaft, Eccentric Adjustment Roller	2
541 40 15-31 (277)	Roller Spacer	2
541 40 15-27 HU (280)	Lower Roller Housing Assembly	1
541 40 38-89 D (280)	Lower Roller Housing Assembly	1
541 40 15-17 HU (281)	Housing Only	1
541 40 38-40 D (281)	Housing Only	1
541 40 15-15 (282)	Lock, Carriage	1
541 40 37-53 (C421)	Setscrew, 1/4-20 x 3/8	4
541 40 37-44 (C486)	Capscrew, 5/16-18 x 1-1/4"	8
541 20 52-40 (C59)	Lock Washer, 5/16 Internal Tooth	8
541 40 15-00 HU (290)	Pinion Bracket Assembly	1
541 40 38-90 D (290)	Pinion Bracket Assembly	1
541 40 14-81 HU (291)	Bracket, Only	1
541 40 38-41 D (291)	Bracket, Only	1
541 40 37-54 (C419)	Setscrew, 1/4-20 x 5/16 1/2 Dog Point	1
541 40 14-76 (292A)	Bearing, Pinion Gear, Small	1
541 40 14-74 (293A)	Bearing, Pinion Gear, Large	1
541 40 04-59 (122B)	Pinion Gear, w/Retaining Ring Groove	1
541 40 14-72 (295)	Retaining Ring	1
541 40 04-11 (142)	Handle	4
541 40 25-13 (144)	Hub	1
541 40 37-82 (C253)	Bolt, 1/2-13 x 2-1/4"	1
541 40 37-81 (C254)	Locknut, 1/2-13 Thin	1
541 40 14-68 (297)	Stud, 1/4-20 x 1/4-28 x 1	4
541 40 22-89 (C16)	Washer, 1/4 SAE	4
541 40 37-52 (C424)	Jam Nut, 1/4-28	4

Item Number	Part Number
1	541 40 11-37 (165)
2	541 40 04-13 (139) (Includes key)
3	541 40 37-74 (C-294) Milwaukee mount 541 40 37-71 (C-341) DeWalt mount 541 40 02-77 (73234) Cardi mount
4	541 40 12-40 (170) (Includes key and hardware) 541 40 12-83 (172) (Adapter only)
5	541 40 12-77 (171)
6	541 40 37-76 (C275)
7	541 40 04-98 (113)
8	541 40 25-74 (158C) 42” 541 40 11-09 (190A) 60” 541 40 11-07 (195A) 72” 541 40 11-05 (197A) 80”
9HU	541 40 12-32 (180)
9D	541 40 38-95 (180)
10HU	541 40 05-62 (100A)
10D	541 40 38-92 (100A)
11	541 40 35-19 (C-490)
12HU	541 40 11-36 (184A)
12D	541 40 38-97 (184A)
13	541 40 11-26 (187A)
14	541 40 37-38 (C-10)
15	541 40 37-31 (C-8)
16	541 40 17-91 (752008)
17	541 40 11-23 (189A)

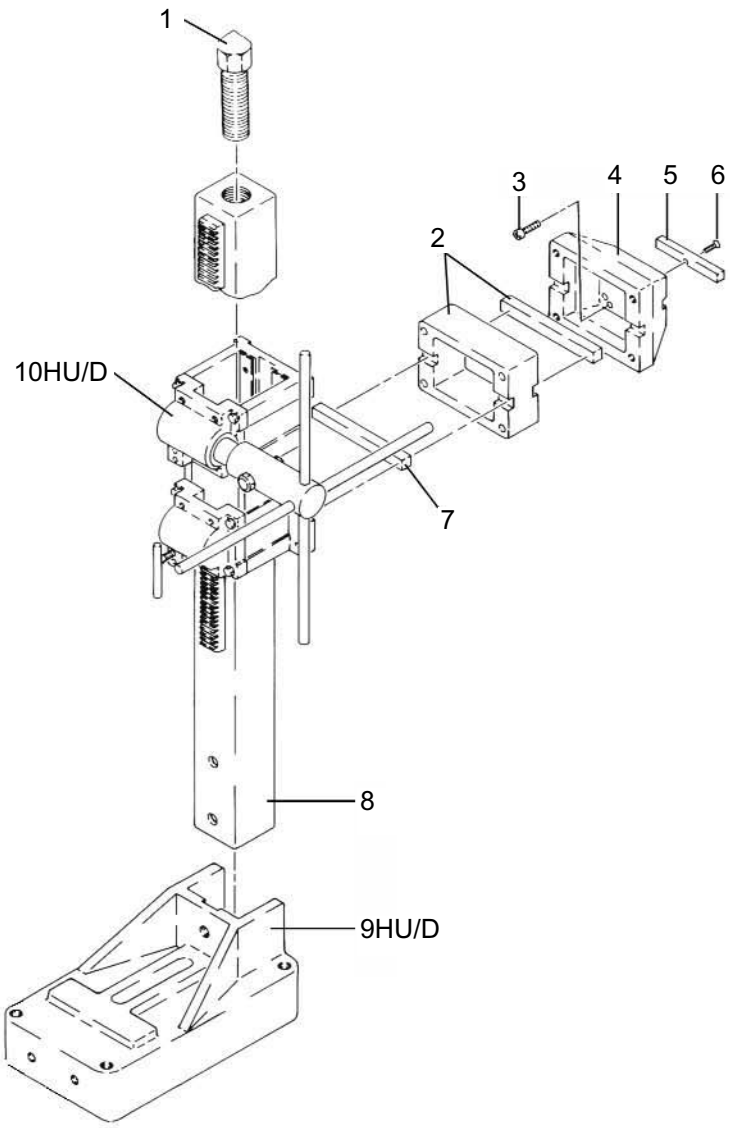

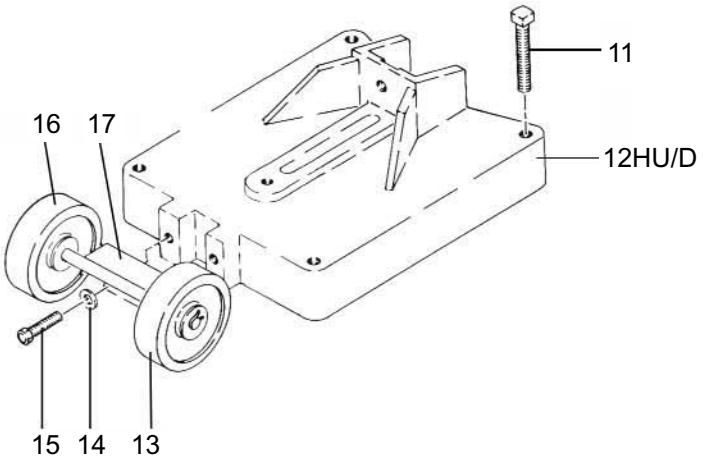

Carriage Assembly
541 40 05-62 HU / 541 40 38-92 D

Item Number	Part Number
1	541 40 04-58 (123)
2	541 40 22-57 (C-274)
3	541 40 37-54 (C-419)
4	541 40 37-91 (C175)
5	541 20 52-40 (C-59)
6	541 40 37-84 (C-228)
7	541 40 14-72 (295)
8	541 40 04-56 (128)
9HU	541 40 04-62 (121A)
9HU Assy	541 40 04-71 (120A)
9D	541 40 38-76 (121A)
9D Assy	541 40 38-86 (120A)
10	541 40 04-59 (122B)
11	541 40 04-57 (127)
12	541 40 37-81 (C-254)
13	541 40 25-13 (144)
14	541 40 04-11 (142)
15	541 40 37-82 (C-253)
16HU	541 40 05-06 (110A)
16D	541 40 38-78 (110A)
17	541 40 37-76 (C-275)
18	541 40 04-98 (113)
19	541 40 37-89 (C-2)
20	541 40 05-05 (111)
21	541 40 22-57 (C-274)
22	541 40 04-58 (123)
23	541 40 22-57 (C274)
24	541 20 52-40 (C-59)
25	541 40 37-91 (C-175)
26	541 40 04-40 (132)
27	541 40 36-43 (C-287)
28	541 40 37-84 (C-228)
29HU	541 40 04-41 (131A)
29HU Assy	541 40 04-47 (130A)
29D	541 40 38-77 (131A)
29D Assy	541 40 38-87 (130A)

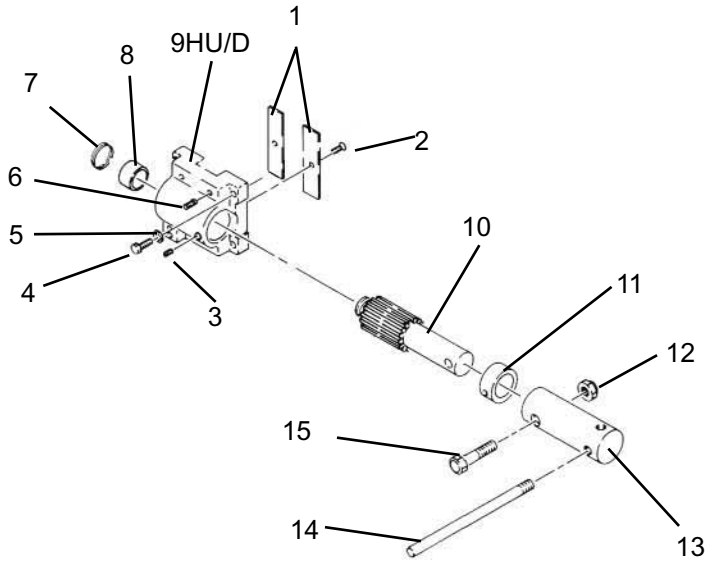

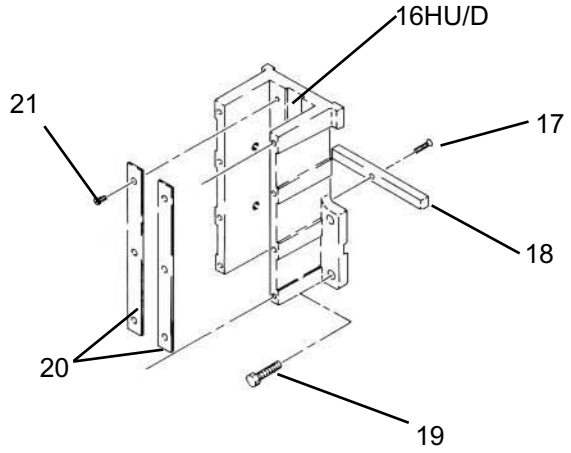

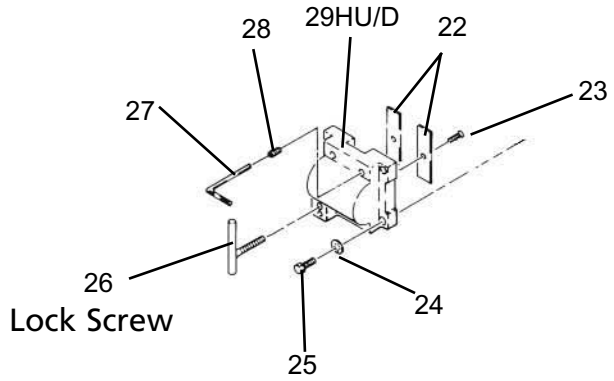

Item Number	Part Number
1	541 40 37-48 (304)
2	541 40 15-92 (409)
3	541 40 18-99 (313)
4	541 40 19-32 (310) (Includes gasket)
5	541 40 19-30
6	541 40 19-01
7	541 40 14-05
8	541 40 14-25

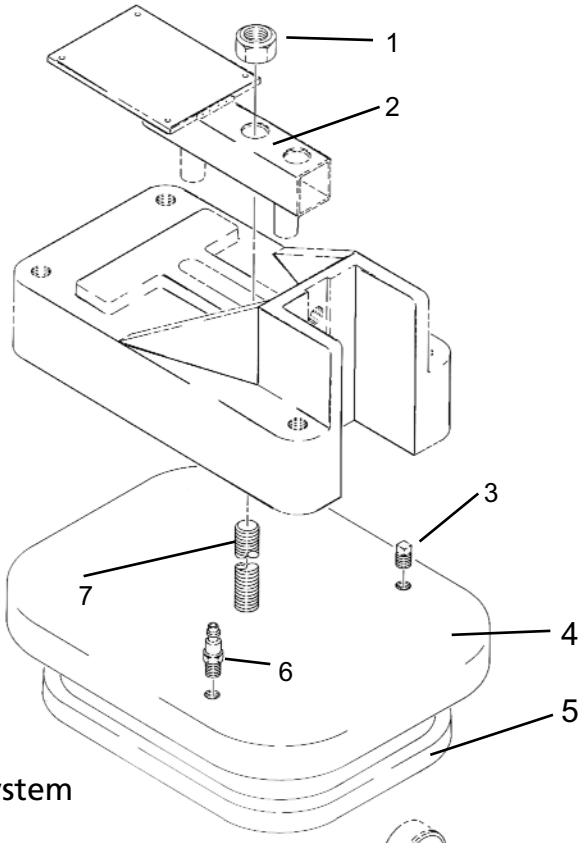

Single Pad Vacuum System
541 40 00-57

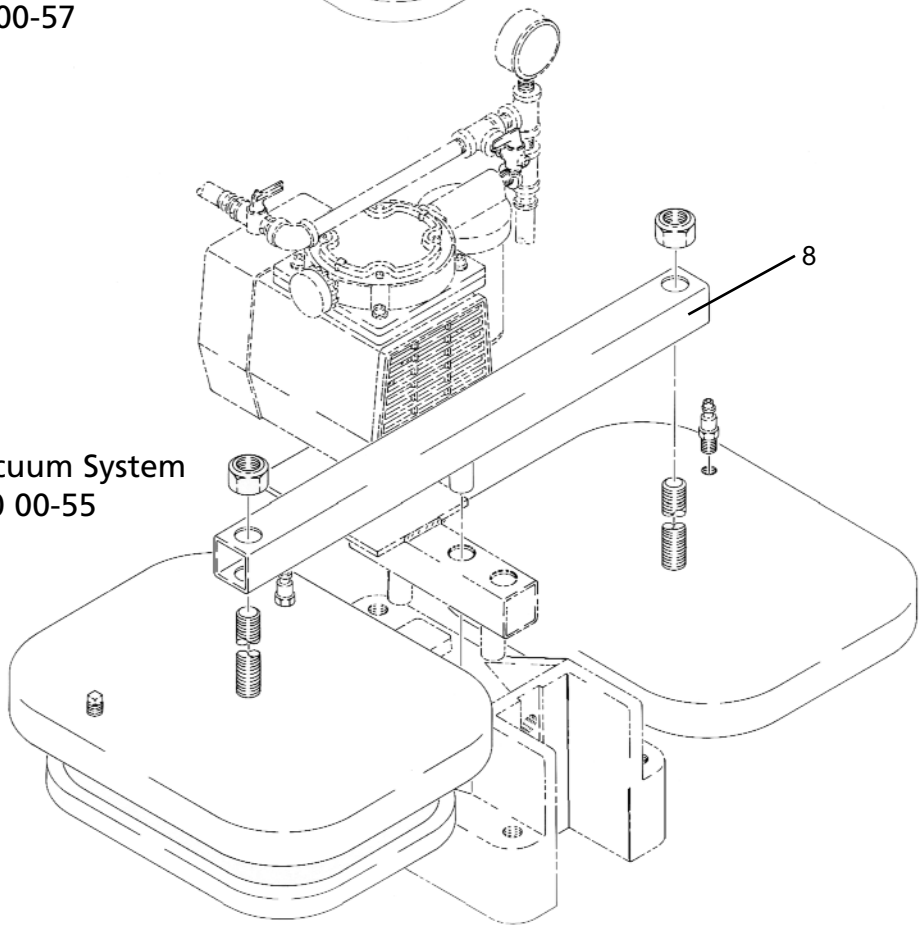

Dual Pad Vacuum System
541 40 00-55

Item Number	Part Number
1	541 40 14-91 (447)
2	541 40 24-22 (A 42)
3	541 40 24-22 (A 42)
4	541 40 15-08 (441)
5	541 40 24-23 (A 41)
6	541 40 15-96 (408)
7	541 40 16-02 (407)
8	541 40 15-92 (409)
9	541 40 37-85 (C223)
10	541 40 15-08 (441)
11	541 40 14-93 (446)
12	541 40 23-58 (A602)
13	541 40 23-59 (A636)
14	541 40 24-22 (A42)
15	541 40 14-95 (445)

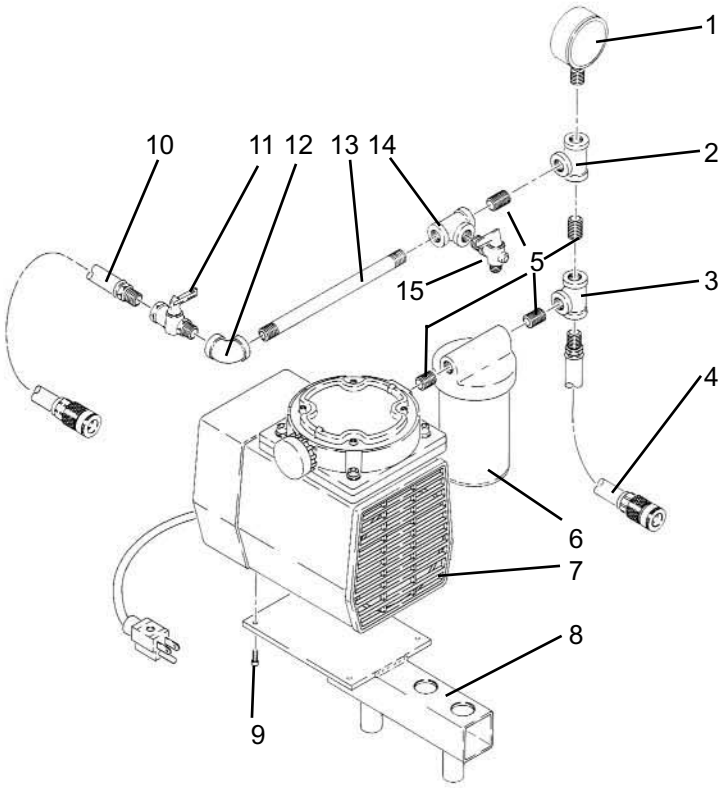

Vacuum Pump Assembly
Single & Dual Pad Vacuum System
541 40 16-07

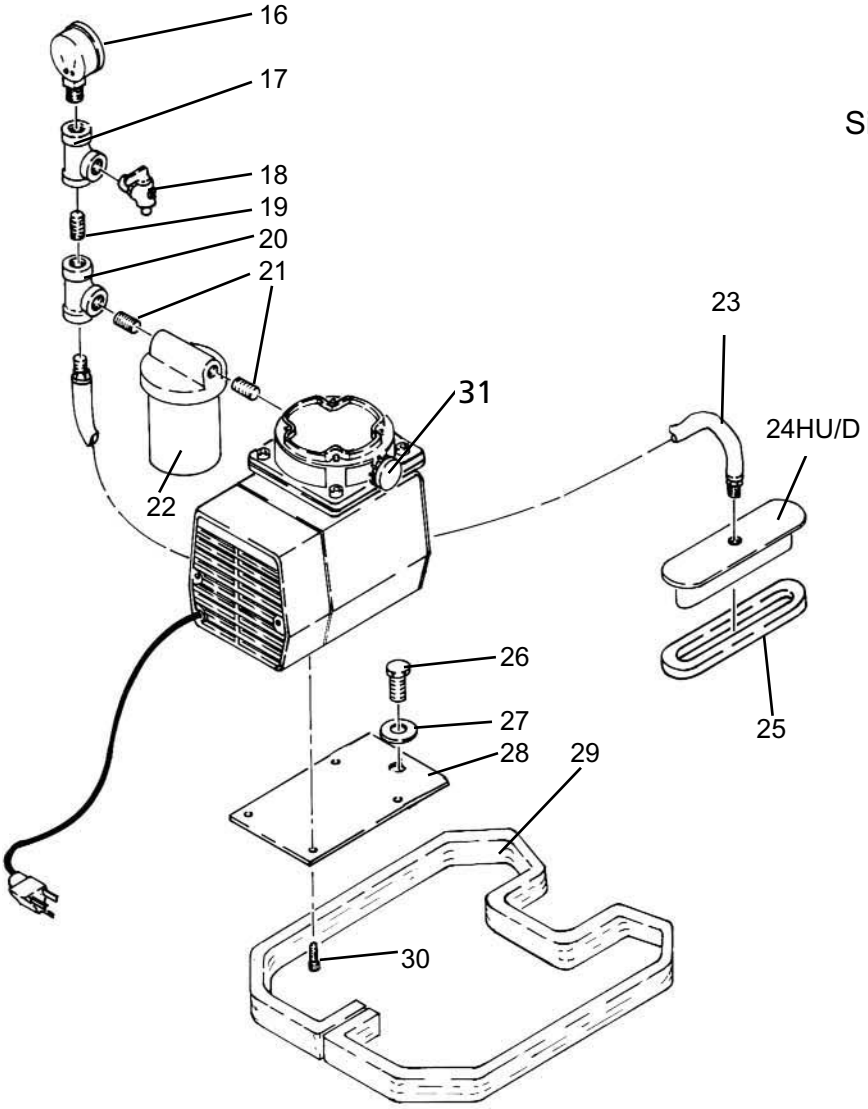

Item Number	Part Number
16	541 40 14-91 (447)
17	541 40 24-22 (A42)
18	541 40 14-95 (445)
19	541 40 24-23 (A41)
20	541 40 24-22 (A42)
21	541 40 24-23 (A41)
22	541 40 15-96 (408)
23	541 40 16-35 (752227)
24HU	541 40 16-51 (752222)
24D	541 40 39-27 (752222)
25	541 40 16-46 (752223)
26	541 40 37-31 (C8)
27	541 40 37-98 (C10)
28	541 40 16-40 (752226A)
29	541 40 16-56 (752221)
30	541 40 22-34 (C494)
31	541 40 15-72 (412)

Vacuum Assembly Combo Base
541 40 00-77HU
541 40 39-29D

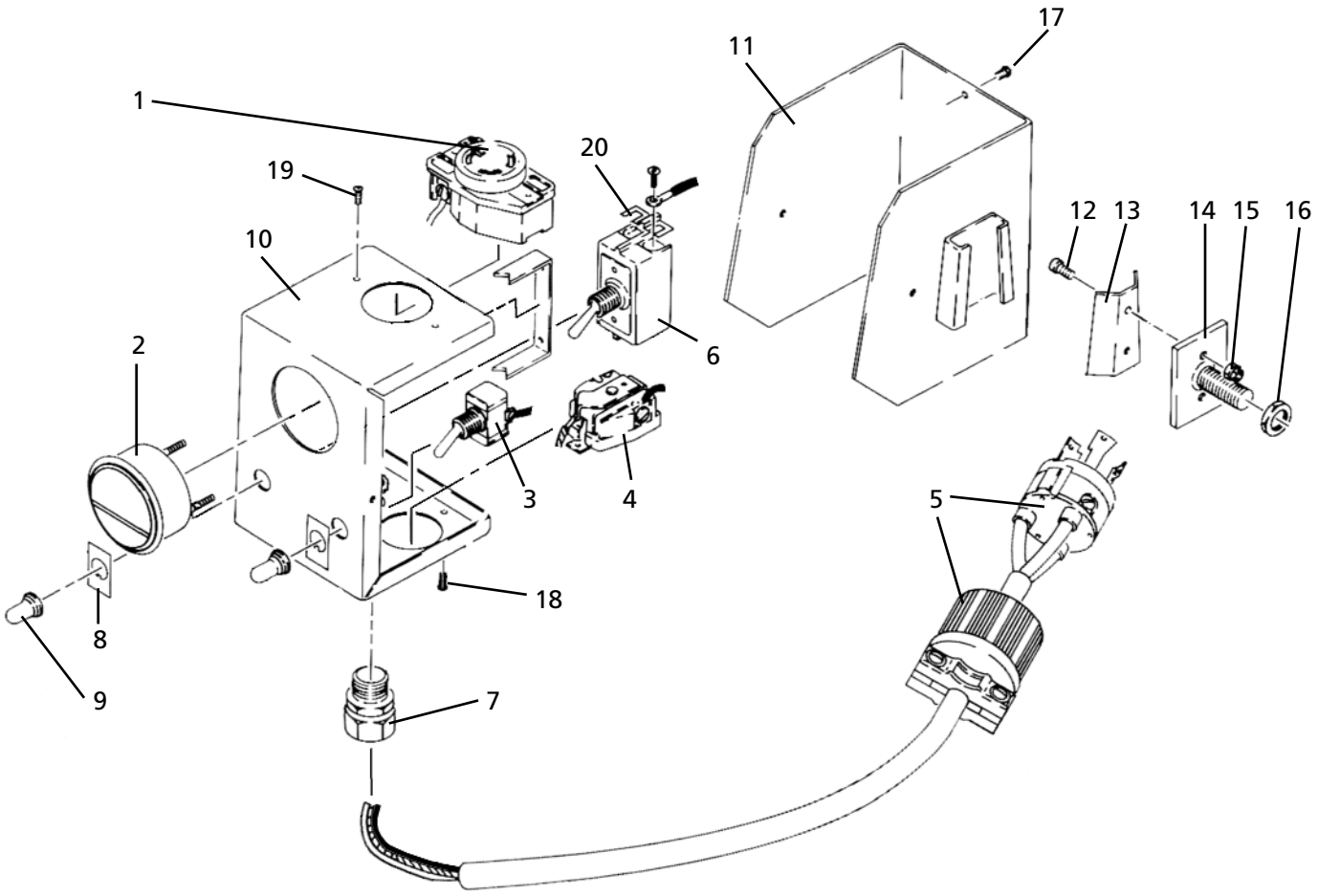

Switch Box Assembly
541 40 40-16

Item Number	Part Number	Item Number	Part Number
1	541 40 10-37 (223)	12	541 40 22-70 (C231)
2	541 20 19-07 (248)	13	541 40 14-44 (474)
3	541 40 16-08 (30622)	14	541 40 14-46 (473)
4	541 40 14-38 (473)	15	541 40 37-94 (C139)
5	541 40 10-35 (225)	16	541 40 36-15 (C255)
6	541 40 10-18 (229)	17	541 40 37-67 (C375)
7	541 40 36-77 (227)	18	541 40 37-64 (C378)
8	541 40 09-99 (238)	19	541 40 37-66 (C376)
9	541 40 10-03 (237)	20	541 40 36-14 (C383)
10	541 40 14-42 (475-1)		
11	541 40 14-40 (475-2)		

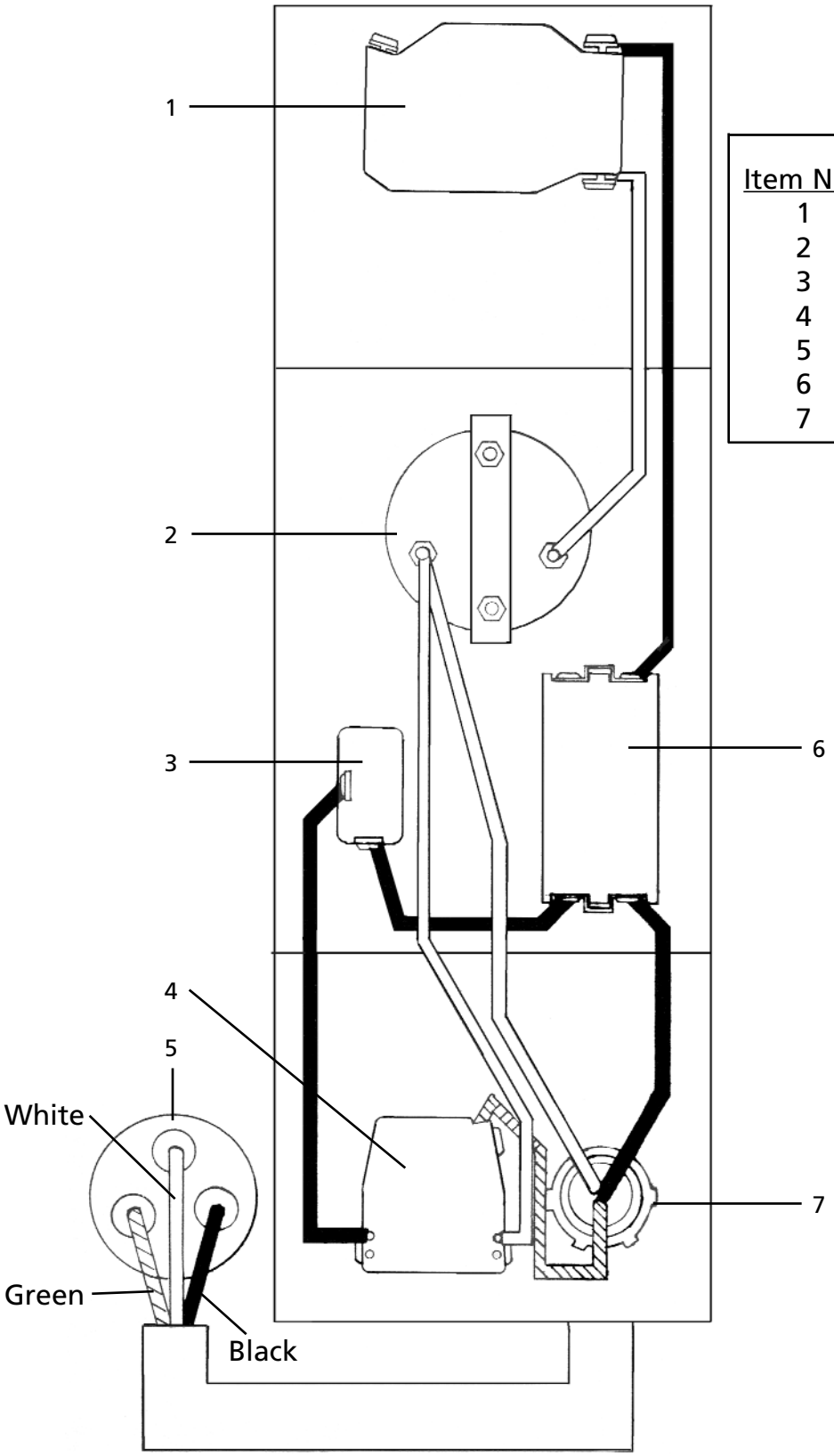

Switch Box Assembly
541 40 40-16

Item Number	Description
1	Receptacle 20A Single
2	Ammeter 0-30 Amp
3	Switch
4	Panel Receptacle 15 Amp
5	Plug, 20 Amp 125 Volt
6	Switch
7	Strain Relief

Switch Box Wiring Schematic

Angle Bracket Assembly
541 40 00-62

Item Number	Part Number
1	541 40 05-40 (106)
2	541 40 35-92 (C497)
3	541 40 35-93 (C498)
4	541 40 37-35 (C70)
5	541 40 37-34 (C71)
6	541 40 35-94 (C499)
7	541 40 16-94 (752051)
8	541 40 37-77 (C273)
9	541 40 37-98 (C10)
10	541 40 35-91 (C442)
11	541 40 37-34 (C71)
12	541 40 16-88 (752052)
13	541 40 16-77 (752054)
14	541 40 16-66 (752056)
15	541 40 37-32 (C79)
16	541 40 37-88 (C20)

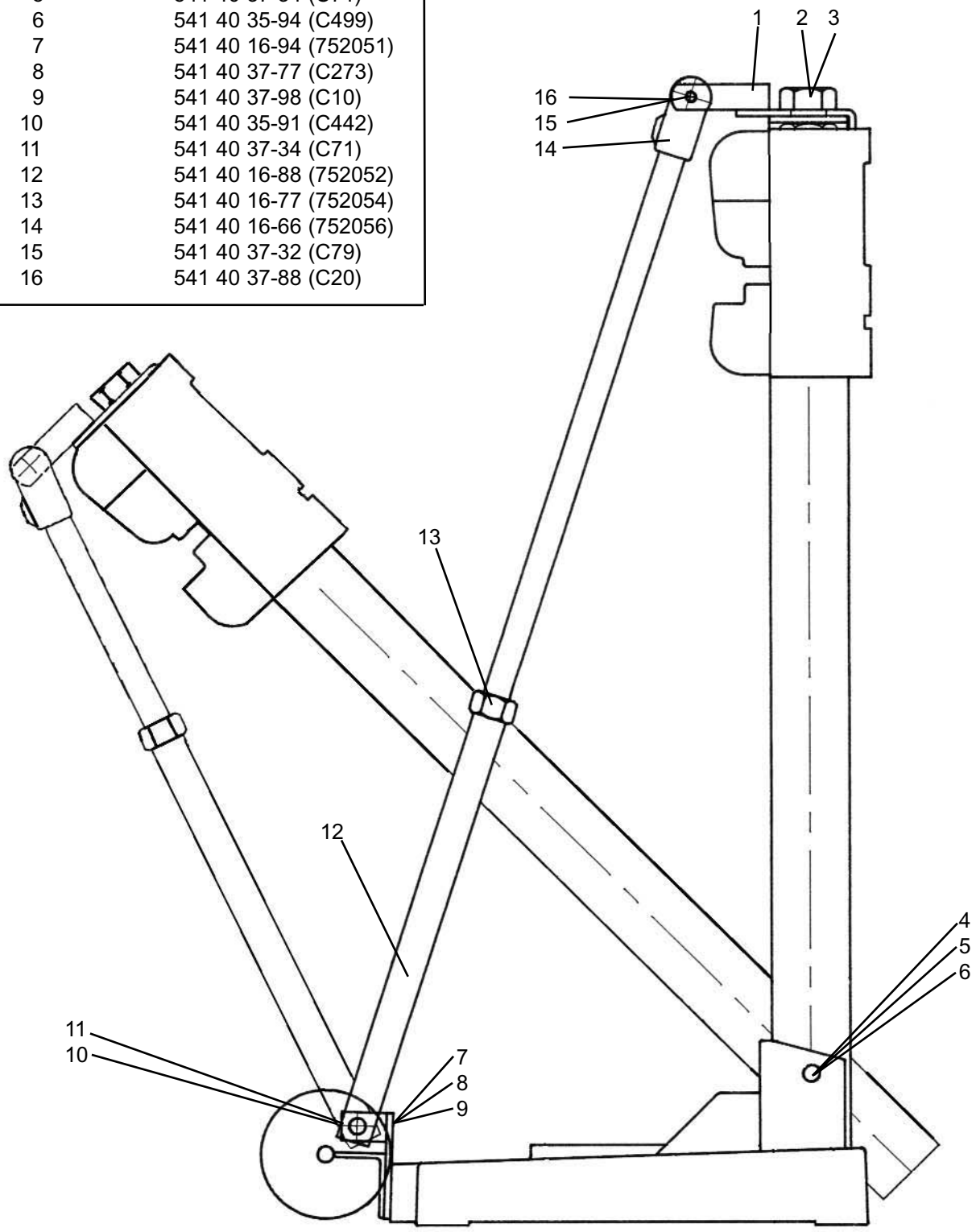

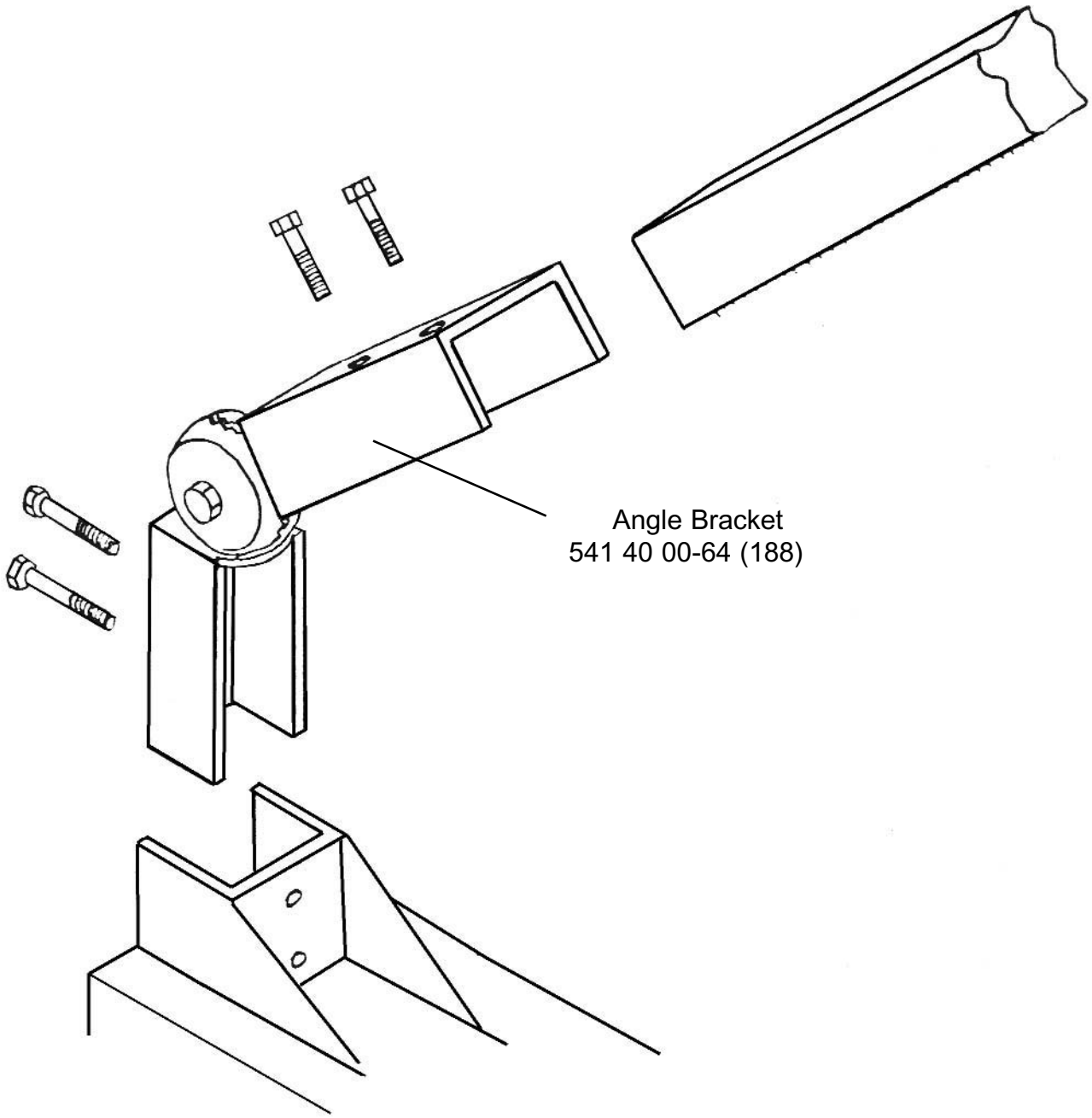
Angle Bracket
541 40 00-64 (188)

OPTIONAL ROLLER CARRIAGE
GENERAL INSTRUCTIONS

This instruction manual describes the assembly, operation, maintenance and safety precautions for proper use of the drill carriage. This equipment is intended for industrial applications by experienced operators.

⚠ Warning

IMPROPER USE OF THIS EQUIPMENT OR IMPROPER MACHINE ALTERATIONS MAY BE EXTREMELY DANGEROUS.

The operator is cautioned against using this machine before having read and fully understood the instructions presented in this manual.

USER RESPONSIBILITIES

It is the operator's responsibility to be fully aware of the requirements for operator safety and the safety of co-workers, observers and the public at large, to provide a safe working environment and to follow proper safety procedures when operating this equipment. Operators must use approved ear protection, safety hat, eye protectors, gloves, safety shoes and any other personal protective equipment required for compliance with standard safety practices or federal, state and local codes and regulations pertaining to safety, pollution, noise, etc.

ROLLER CARRIAGE ASSEMBLY (Page 23)

1. Attach hub and handles as shown.
2. Install lock screw, (32).
3. Attach drill motor or drill motor adapter as required. Use 3/8-16, Grade 5 (or better) capscrews.
4. Insert carriage on drill column, check for "play" and adjust as require.

BEARING REPLACEMENT (Page 23)

1. Rollers - Remove roller as shown from carriage, remove old bearing and press in new bearing flush to the roller surface. Take care not to damage the bearing or roller.
2. Pinion - Removal: Remove setscrew (35) and retaining ring (39). Remove pinion (31) and large bearing (27). Press out small bearing (38). Installation: Press small bearing into housing so that bearing is flush with outside surface. Install the pinion and slide into place the large bearing. Install retaining ring. Drill through the setscrew hole into the bearing with a 5/32 drill - .050/.060 deep. Install the setscrew (use thread locking compound) by bottoming it in and then turn back 1/8 - 1/4 turn.

Caution

BEFORE STARTING DRILL MOTOR, MAKE SURE DRILL STAND IS SECURELY ATTACHED TO SURFACE TO BE DRILLED.

MAINTENANCE

Clean the drill carriage after each use. All rollers utilize oil impregnated bronze bearings, no lubrication is required. Check carriage play on the column and adjust the rollers if required. See roller adjustment (Page 24) for instructions. Inspect and tighten all capscrews.

Caution

LOCK CARRIAGE TO COLUMN WHEN NOT IN USE BY TIGHTENING LOCK SCREW (32), PAGE 22.

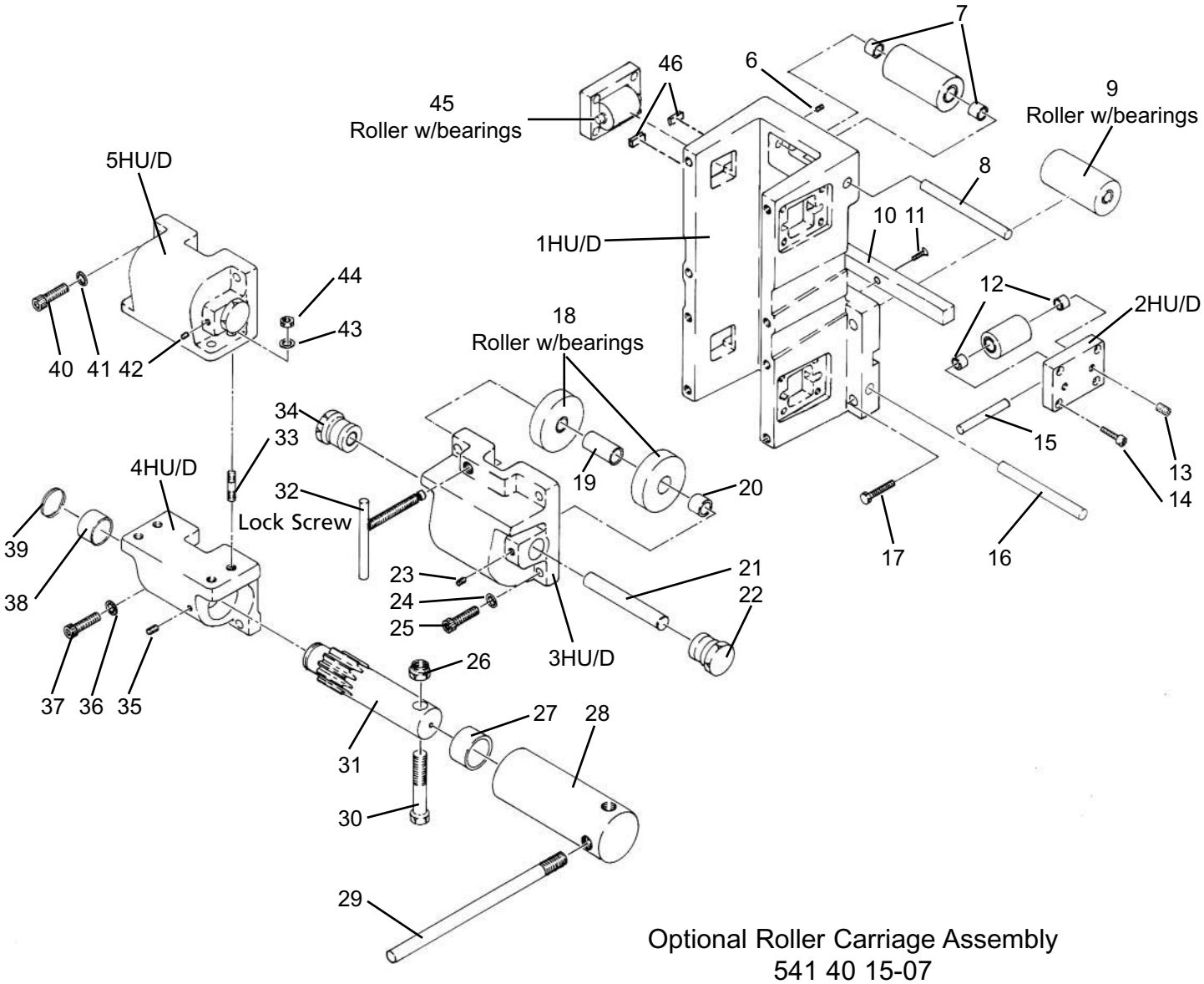

Optional Roller Carriage Assembly
541 40 15-07

Item Number	Part Number	Item Number	Part Number	Item Number	Part Number
1HU	541 40 15-35 (258)	13	541 40 37-60 (C385)	30	541 40 37-82 (C253)
1D	541 40 38-42 (258)	14	541 40 36-25 (C422)	31	541 40 04-59 (122B)
2HU	541 40 15-51 (268)	15	541 40 15-44 (262)	32	541 40 15-15 (282)
2D	541 40 38-43 (268)	16	541 40 15-22 (256)	33	541 40 14-68 (297)
3HU	541 40 15-27 (280)	17	541 40 37-32 (C79)	34	541 40 15-46 (272)
3D	541 40 38-89 (280)	18	541 40 15-37 (275)	35	541 40 37-54 (C419)
4HU	541 40 15-00 (290)	19	541 40 15-31 (277)	36	541 20 52-40 (C59)
4D	541 40 38-90 (290)	20	541 40 15-40 (274A)	37	541 40 37-44 (C486)
5HU	541 40 15-64 (270)	21	541 40 15-33 (276)	38	541 40 14-76 (292)
5D	541 40 38-88 (270)	22	541 40 15-46 (272)	39	541 40 14-72 (295)
6	541 40 22-75 (C219)	23	541 40 37-53 (C421)	40	541 40 37-44 (C486)
7	541 40 15-23 (254A)	24	541 20 52-40 (C59)	41	541 20 52-40 (C59)
8	541 40 15-22 (256)	25	541 40 37-44 (C486)	42	541 40 37-53 (C421)
9	541 40 15-25 (255)	26	541 40 37-81 (C254)	43	541 40 22-89 (C16)
10	541 40 04-98 (113)	27	541 40 14-74 (293A)	44	541 40 37-52 (C424)
11	541 40 37-76 (114)	28	541 40 25-13 (144)	45	541 40 15-38 (265)
12	541 40 15-41 (264A)	29	541 40 04-11 (142)	46	541 40 15-57 (269)

ROLLER CARRIAGE ADJUSTMENT

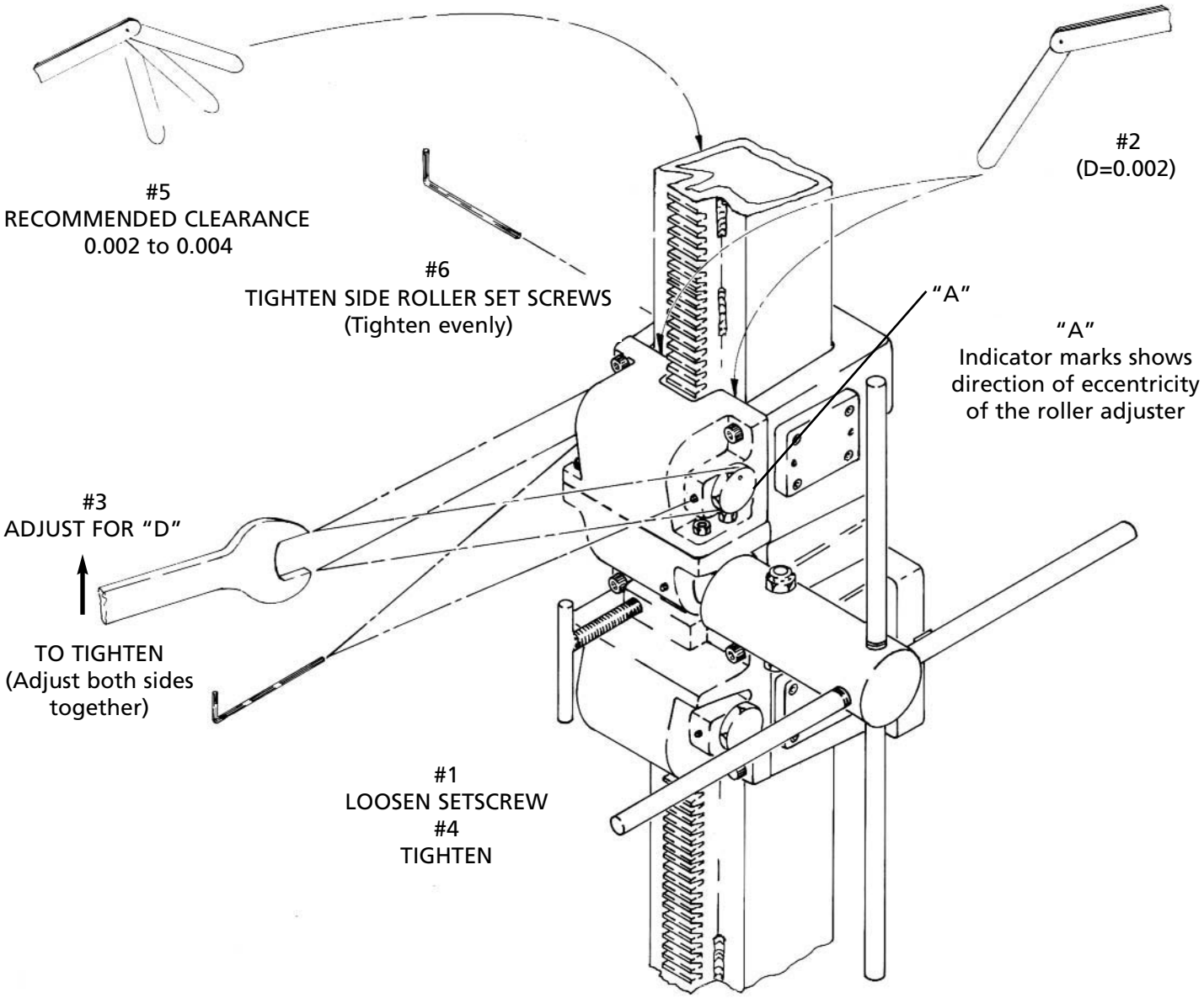

(Perform adjustment procedure with clean carriage and column)

ELECTROLUX CONSTRUCTION PRODUCTS
Product Limited Warranty

Equipment manufactured by Electrolux Construction Products (a division of Electrolux Professional Outdoor Products, Inc.) is warranted to be free from defects in material and workmanship if operated properly, without abuse or negligence in normal service applications for a period of **two (2) years from date of purchase by the original consumer purchaser** with the following exception:

Target DR 150 Core Drills	Three (3) months	Felker FRS-30	One (1) year
Felker FTS-50	Three (3) months	Felker FRS-38	One (1) year
Felker FTS-70	Six (6) months	Felker FRS-51	One (1) year
Felker TM-75	One (1) year	Felker Track Master II	One (1) year
Felker FTS-150	One (1) year		

Keep all payment records (bill of sale/delivery slip). The date on these records establishes the warranty period. Should warranty service be required, you must show proof of purchase. If proof of purchase cannot be supplied, the warranty period will determined from the date of manufacture of the product.

All warranty claims will be determined after inspection at a designated facility. Write or call Electrolux at 17400 W. 119th Street, Olathe, KS 66061, 800-365-5040, for instructions. The customer must prepay the freight and absorb any labor expense required to return or replace a product submitted to Electrolux for warranty consideration. Electrolux will pay return shipping expenses for repaired or approved replacement products. **Under no circumstances will Electrolux be responsible for incidental or consequential damages.**

The responsibility of Electrolux under this warranty is limited to the repair or replacement, at our option, of defective parts and assemblies at its plant in Olathe, KS and Torrance, CA, and does not cover engines, motors, pumps, transmissions and other trade accessories sold with, attached to, or operated with Electrolux products. Such components, parts and accessories are subject to the original manufacturer's warranty policy and procedures. Normal wear items, such as filters, V-belts and wheels are not covered under this warranty.

The Electrolux warranty does not apply to defects caused by abuse, modifications, low voltage, acts of God, unreasonable use, faulty repairs made by others or damage or loss caused by failure to provide reasonable maintenance. All warranties are void if the equipment or any of its components are altered or modified by the purchased, or if the product is used in a manner or with a blade not recommended by the manufacture.

The foregoing express warranties are in lieu of all other warranties. **ELECTROLUX EXPRESSLY DISCLAIMS ALL OTHER WARRANTIES, INCLUDING, WITHOUT LIMITATION, THE IMPLIED WARRANTIES OF MERCHANTABILITY AND FITNESS FOR A PARTICULAR PURPOSE.**

Some states do not allow exclusion of warranties or limitations of damages, so the limitations and exclusions contained in this warranty may not apply to you. This warranty gives you specific legal rights. You many have additional rights, which vary from state to state.

Target Corporate Office
17400 West 119th Street
Olathe, Kansas 66061

Customer Service: 800-288-5040
Customer Serv. Fax: 800-825-0028
Corporate Office: 913-928-1000
Corp. Office Fax: 913-438-7951

Target California
Customer Service: 310-381-3100
Customer Serv. Fax: 310-381-3194

Target Canada
Customer Service: 800-461-9589
Customer Serv. Fax: 800-728-1907

Target International
Customer Service: 913-928-1300
Customer Serv. Fax: 913-438-7938

⚠ DUST WARNING ⚠

Cutting, especially when DRY cutting, generates dust that comes from the material being cut, which frequently contains silica. Silica is a basic component of sand, quartz, brick clay, granite and numerous other minerals and rocks. Exposure to excessive amount of such dust can cause:

- Respiratory diseases (affecting your ability to breath), including chronic bronchitis, silicosis and pulmonary fibrosis from exposure to silica. These diseases may be fatal;
- Skin irritation and rash; and
- Cancer according to NTP* and IARC*
  * National Toxicology Program / International Agency for Research on Cancer

Take precautionary steps

- Avoid inhalation of and skin contact with dust, mist and fumes;
- Wet cut when feasible, to minimize dust;
- Wear and ensure that all bystanders wear appropriate respiratory protection such as dust masks designed to filter out microscopic particles. (See OSHA 29 CFR Part 1910.1200)

California Prop 65 Warning:
Use of this product can cause exposure to materials known to the State of California to cause cancer and/or birth defects or other reproductive harm.

TARGET®

www.targetblue.com