PG 530, To machine number 1208-3, 2008-1

SPARE PARTS LIST

B2

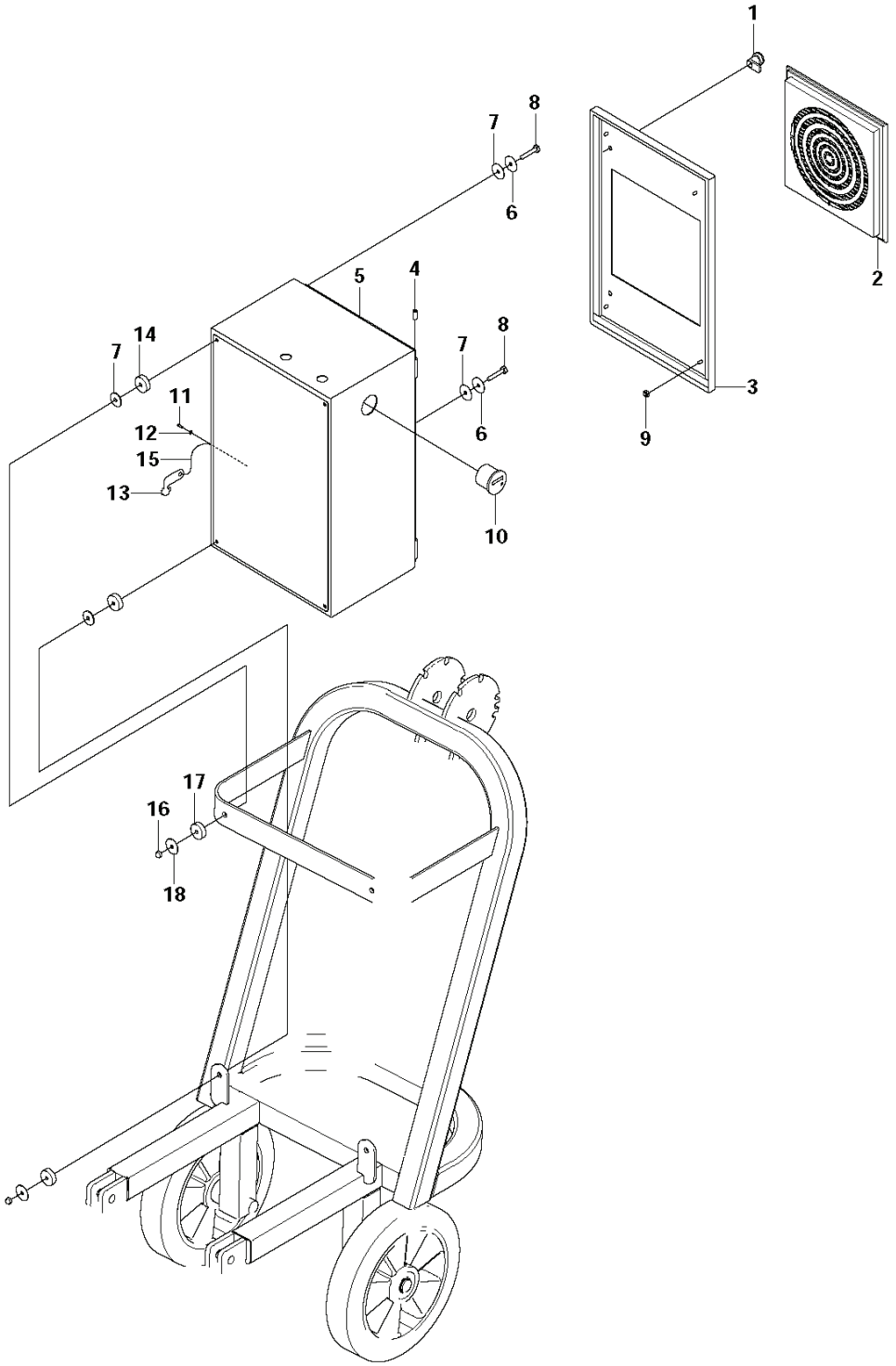

REF.	PART NO.	DESCRIPTION	REMARK	QTY.	KIT
1	516059801	LATCH		2	
2	502544101	VENT		1	
3	516059901	ELECTRIC BOX		1	
4	516060001	PEN		2	
5	502544301	ENCLOSURE		1	
6	504747301	WASHER		4	
7	516060101	WASHER		8	
8	725246176	SCREW EHHM		4	
9	732251601	HEXAGON LOCKING NUT		1	
10	504741301	HOUR METER		1	
11	521886401	SCREW		1	
12	734115201	WASHER		1	
13	516060201	KEY		1	
14	502533901	WASHER		4	
15	516060301	CABLE		1	
16	504753001	FASTENER		4	
17	515984101	WASHER		4	
18	521886701	WASHER		4	

C4

Single Phase

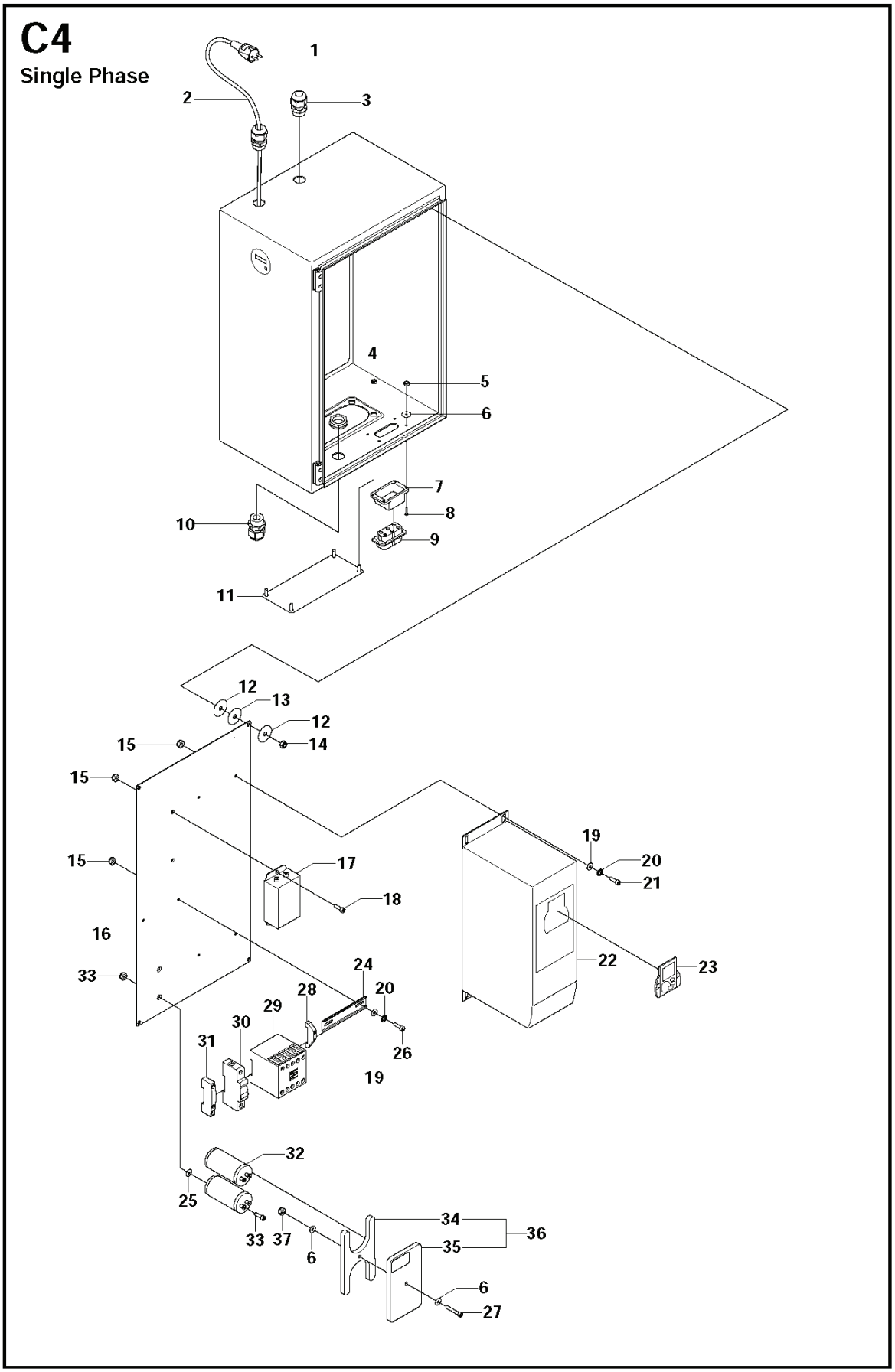

REF.	PART NO.	DESCRIPTION	REMARK	QTY.	KIT
1a	504753801	PLUG	MALE PLUG AU 220–240V	1	
1b	510222802	CABLE	MALE PLUG EU/JPN 2PIN 16AMP 220V	1	
1c	522786101	PLUG	MALE PLUG CAN/USA TWIST LOCK 220V	1	
2	504755701	POWER CABLE		1	
3	516061801	GROMMET		2	
4	732251601	HEXAGON LOCKING NUT		4	
5	732251201	HEXAGON LOCKING NUT		9	
6	734113741	WASHER		10	
7	516060401	HOUSING		1	
8	521887401	SCREW CRPANM		8	
9	516060501	CONNECTOR		1	
10	522660301	GROMMET		1	
11	516060801	PLATE		1	
12	504747301	WASHER		8	
13	516060101	WASHER		4	
14	732251801	HEXAGON LOCKING NUT		4	
15	521886601	RIVET		6	
16	516060901	PLATE		1	
17	504717001	FILTER		1	
18	521886401	SCREW		2	
19	734115201	WASHER		6	
20	735215301	LOCKWASHER		6	
21	725537001	SCREW IHSCM		4	
22a	504753201	INVERTER	NXL DISPLAY PANEL	1	
22b	516061001	PAN	NXS DISPLAY PANEL	1	
23	505464001	KEYBOARD		1	
24	516061101	RAIL		1	
25	504753401	WASHER		2	
26	541405178	SCREW IHPANM		2	
27	725529901	SCREW IHSCM		1	
28	522660501	CLAMP		1	
29	504753601	CONTACTOR		1	
30	504753701	CIRCUIT BREAKER		1	
31	502543801	TERMINAL BLOCK		1	
32	504753301	CAPACITOR		2	
33	504753501	NUT		2	
34	522660601	COVER		1	36
35	522660701	COVER		1	36
36	522660801	COVER		1	

C3

3 phase

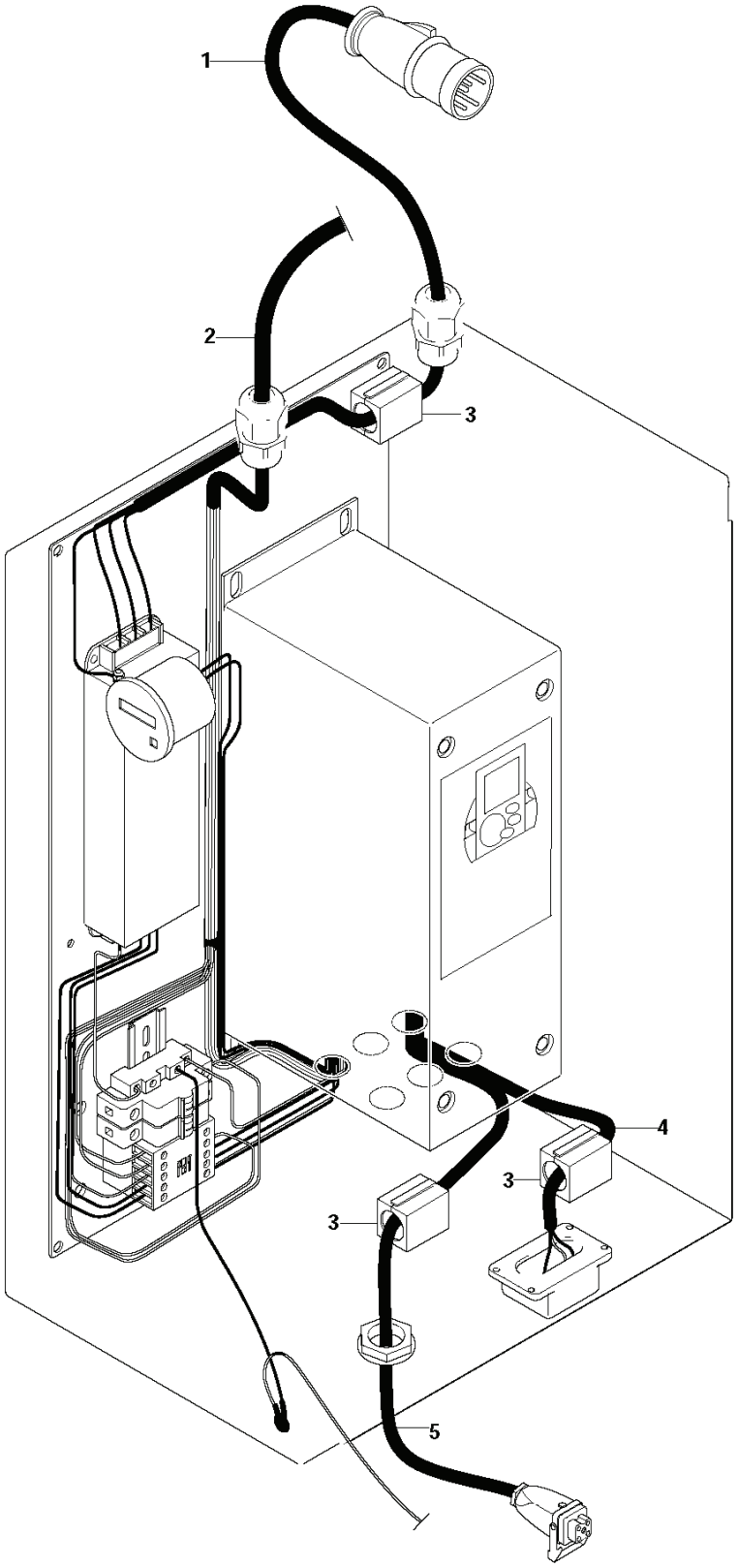

REF.	PART NO.	DESCRIPTION	REMARK	QTY.	KIT
1	504755701	POWER CABLE		1	
2	504753901	PANEL		1	
3	504717201	FERRITE		3	
4	522660201	CABLE		1	
5	522660101	CABLE		1	

C2

Single Phase

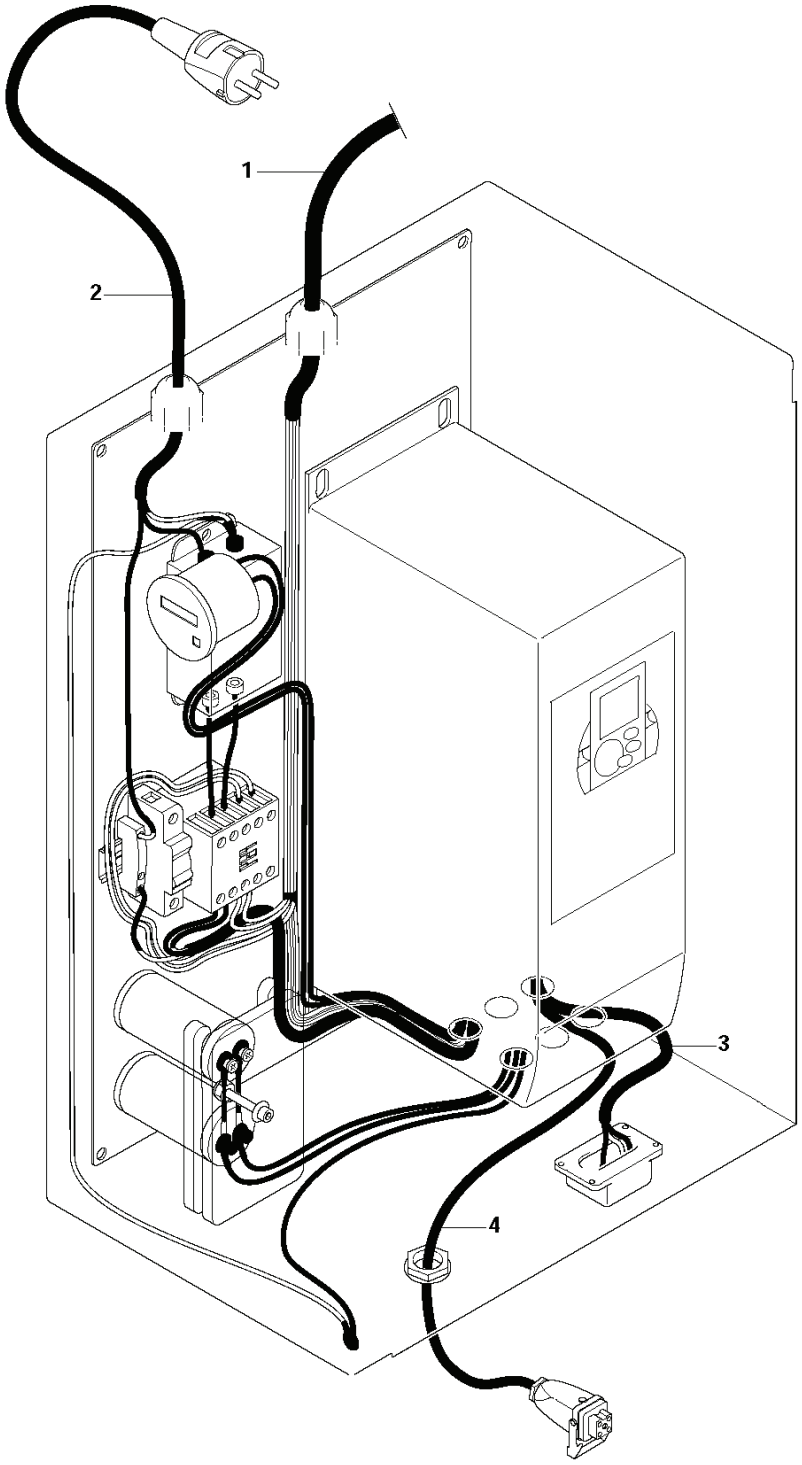

REF.	PART NO.	DESCRIPTION	REMARK	QTY.	KIT
1	504753901	PANEL		1	
2	504755701	POWER CABLE		1	
3	522660001	CABLE		1	
4	522660101	CABLE		1	

C1

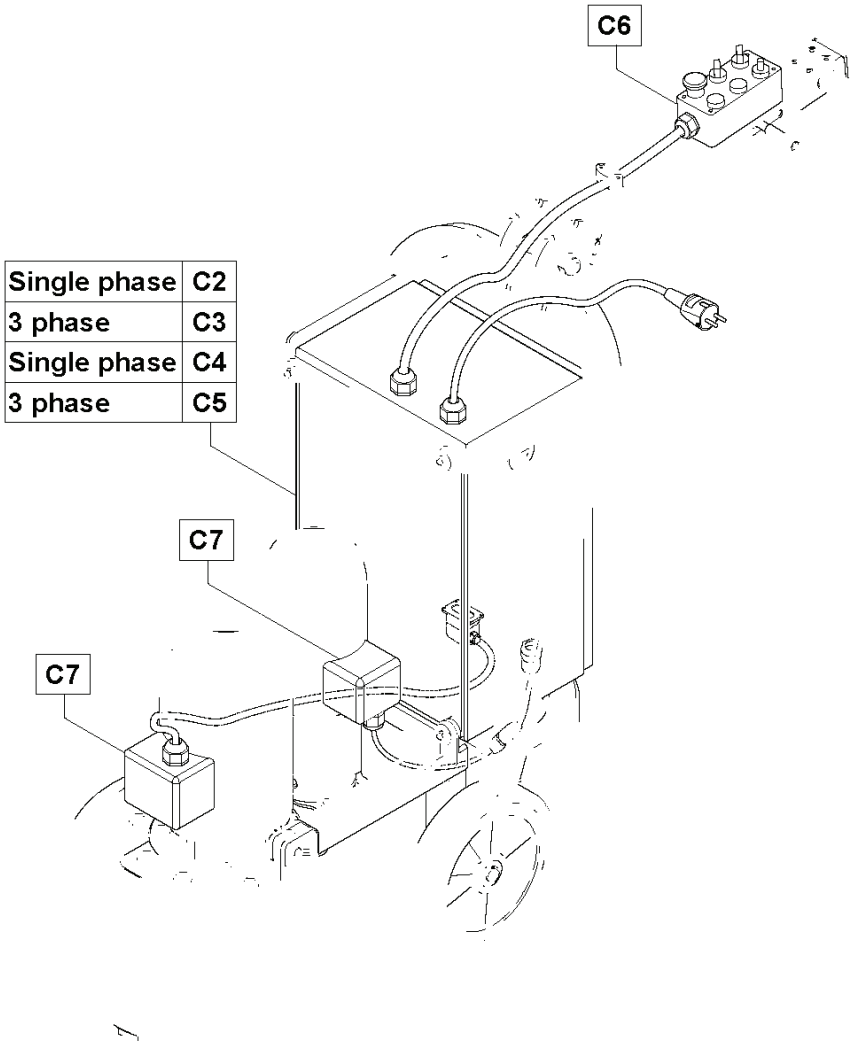

Single phase	C2
3 phase	C3
Single phase	C4
3 phase	C5

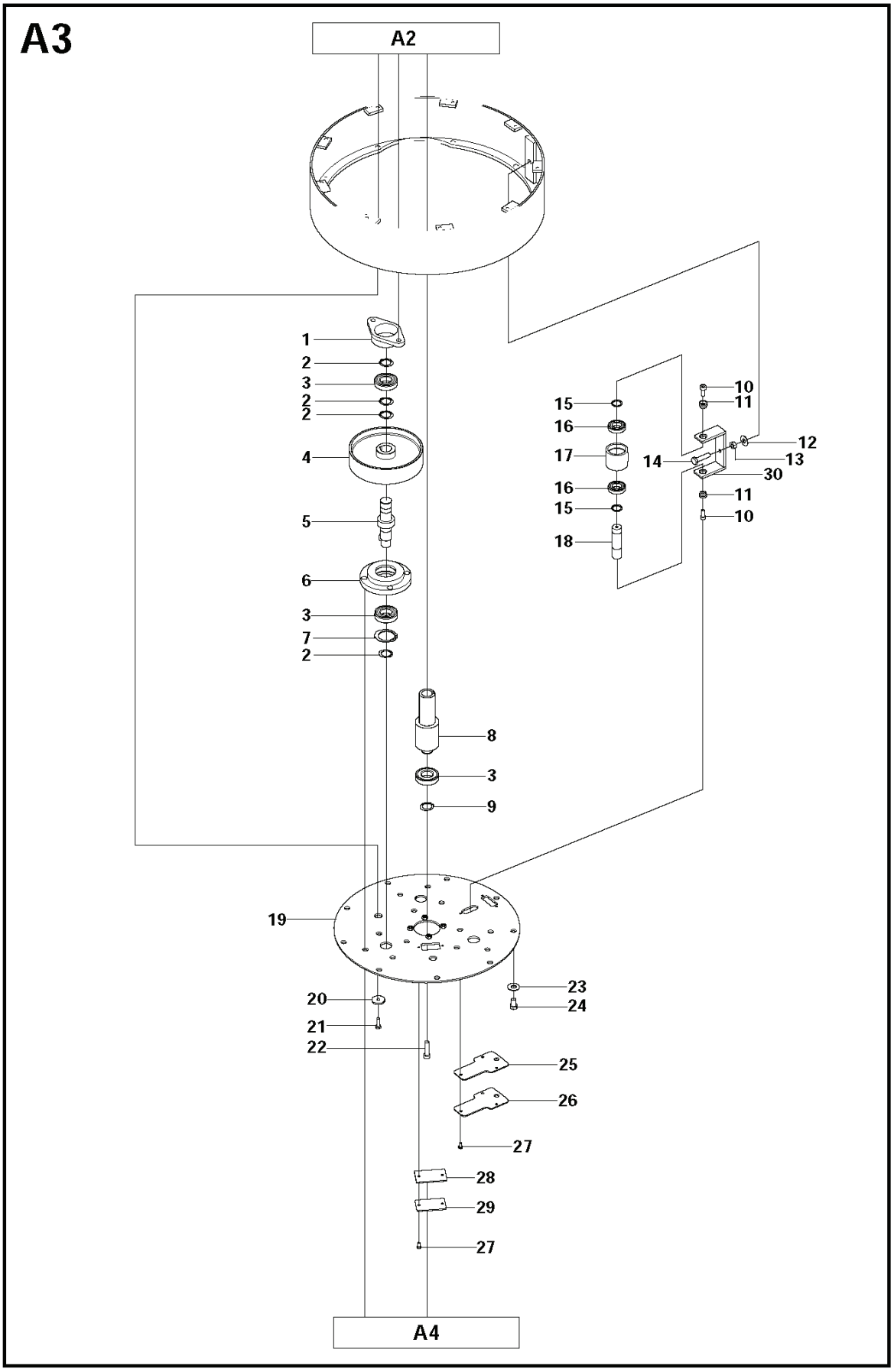
A3
A2
1
2
3
2
2
4
5
6
3
7
2
8
3
9
19
20
21
22
23
24
25
26
27
28
29
27
A4
10
11
12
13
14
30
11
10
15
16
17
16
15
18

REF.	PART NO.	DESCRIPTION	REMARK	QTY.	KIT
1	502560701	BEARING HOUSING		3	
2	735313000	CIRCLIP		12	
3	502562401	BALL BEARING		7	
4	502560001	PULLEY		3	
5	502560201	SHAFT		3	
6	502560601	BEARING HOUSING		3	
7	502563301	CIRCLIP		3	
8	502560101	PULLEY		1	
9	735313000	CIRCLIP		1	
10	725545101	SCREW IHSCM		2	
11	504724201	GUIDE BUSHING		2	
12	734117201	WASHER		1	
13	731232001	HEXAGON NUT		1	
14	725249971	SCREW EHHM		1	
15	735312600	CIRCLIP		4	
16	502562801	BALL BEARING		1	
17	502560401	PULLEY		1	
18	502560501	SHAFT		1	
19	502561201	BOTTOM PLATE		1	
20	504728601	WASHER		2	
21	725245176	SCREW EHHM		2	
22	522620201	SCREW IHSCM		1	
23	734117801	WASHER		9	
24	725253271	SCREW EHHM		9	
25	522659501	SEAL		1	
26	504725501	COVER PLATE		1	
27	725236671	SCREW EHHM		5	
28	516058501	SEAL		1	
29	504727901	COVER PLATE		1	
30	502561901	FRAME		1	

A4

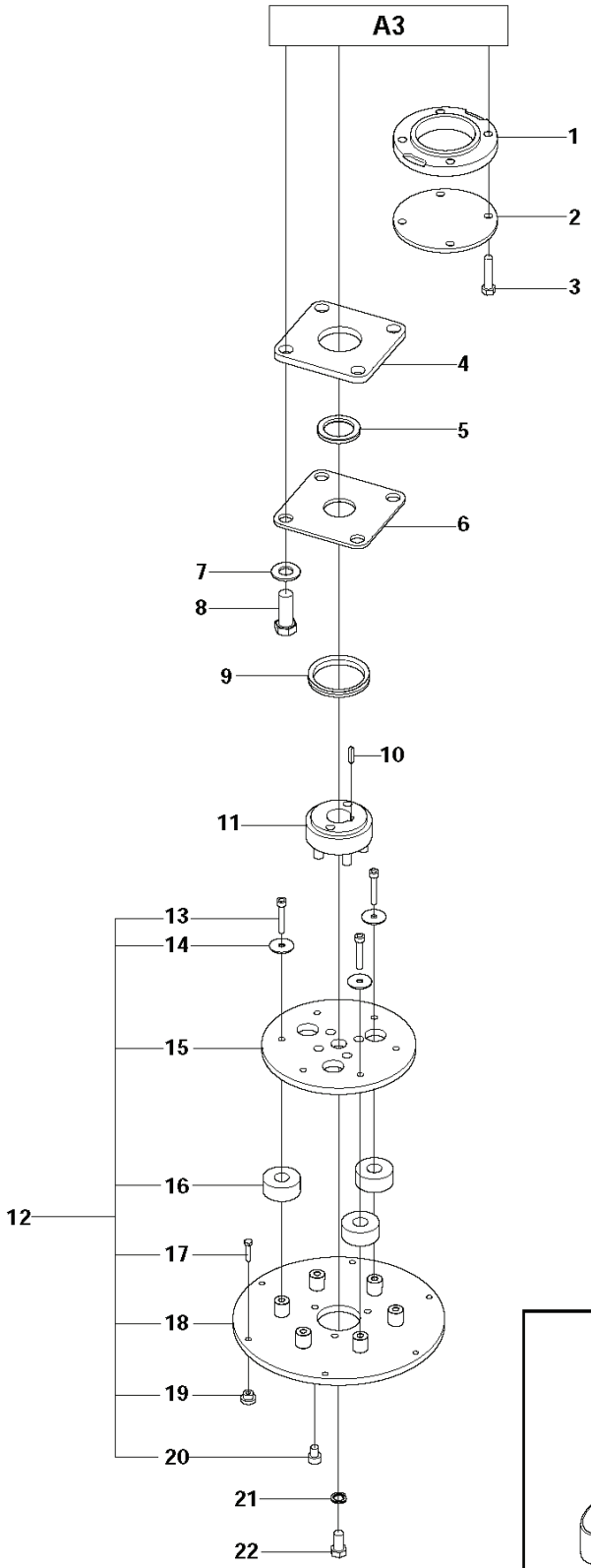

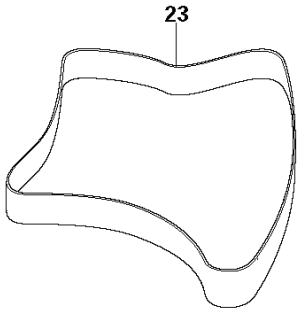

REF.	PART NO.	DESCRIPTION	REMARK	QTY.	KIT
1	502560901	BEARING HOUSING		1	
2	502561401	COVER PLATE		1	
3	725245576	SCREW EHHM		4	
4	502561701	HOUSING		3	
5	502563401	RADIAL SEAL		3	
6	502561801	COVER		3	
7	734118201	WASHER		12	
8	522620301	SCREW		12	
9	502563601	SEAL		3	
10	522659601	PARALLEL KEY		3	
11	502561001	HEAD		3	
12	502558201	GRINDER		3	
13	725536801	SCREW IHSCM		18	12
14	522620501	WASHER		18	12
15	522659701	PLATE		3	12
16	502533901	WASHER		9	12
17	725537001	SCREW IHSCM		9	12
18	522659801	PLATE		3	12
19	502534401	LOCK		9	12
20	504748401	SCREW IHSCM		9	12
21	504749602	LOCKWASHER		3	
22	522661801	SCREW EHHM		3	
23	502563901	DRIVE CABLE		1	

C7

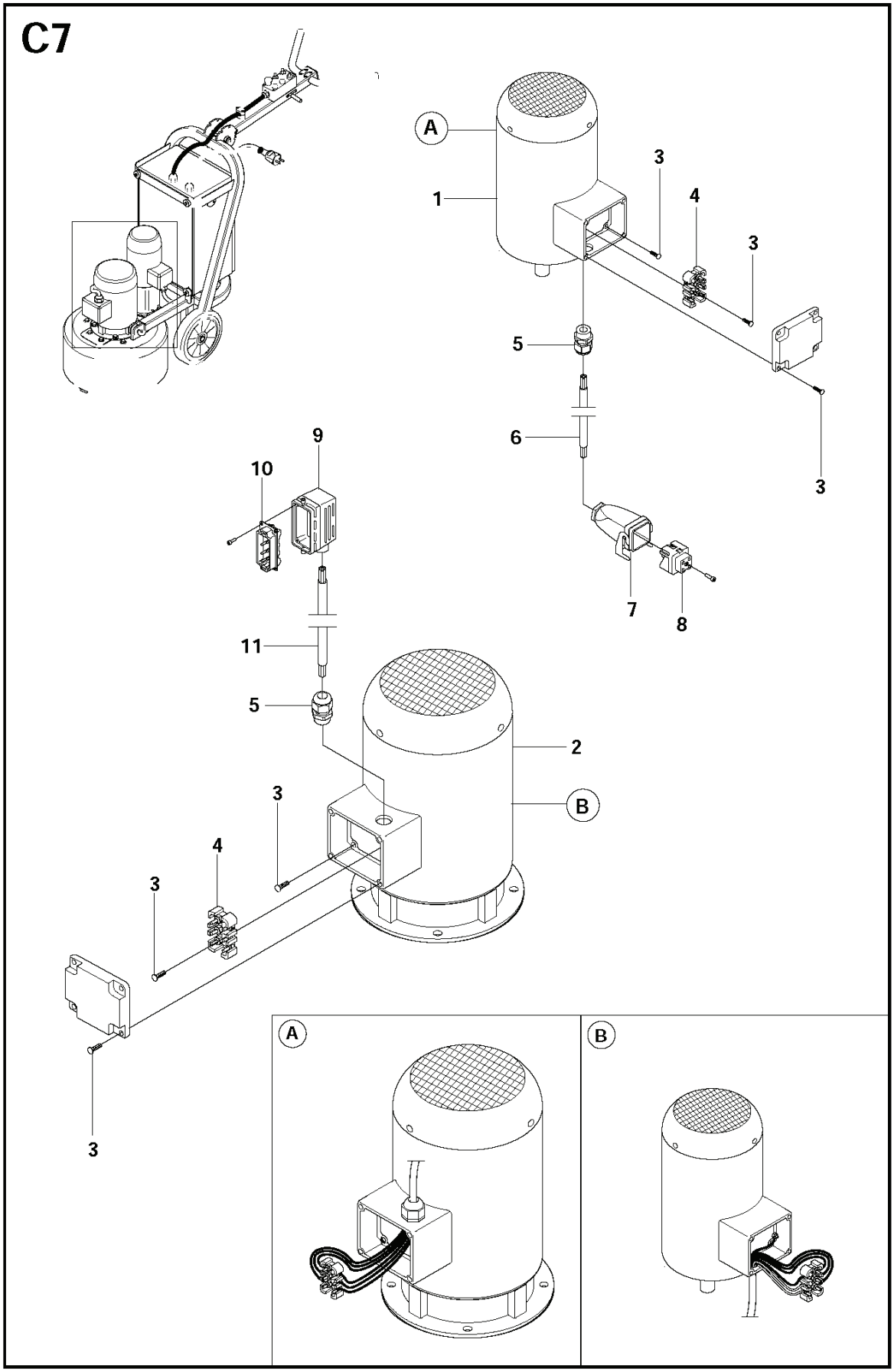

REF.	PART NO.	DESCRIPTION	REMARK	QTY.	KIT
1	502559701	ELECTRIC MOTOR		1	
2a	502559401	MOTOR	SINGLE PHASE	1	
2b	505523201	MOTOR	3 PHASE	1	
3	521886901	SCREW		10	
4a	516061901	TERMINAL BLOCK	SINGLE PHASE	1	
4b	516062001	TERMINAL BLOCK	3 PHASE	1	
5a	516061201	GROMMET	SINGLE PHASE	2	
5b	522661201	GROMMET	3 PHASE	1	
6	504755801	CABLE ASSY		1	
7a	522661301	PLUG	3 POLE + EARTH -HOOD	1	
7b	522661401	PLUG	3 POLE + EARTH - HOOD WITH CLIP	1	
8a	522661501	CONNECTOR	3 POLE + EARTH - PLUG	1	
8b	522661601	CONNECTOR	3 POLE + EARTH -SOCKET	1	
9	516061301	HOOD		1	
10	516061401	CONNECTOR		1	
11	522661701	CABLE		1	

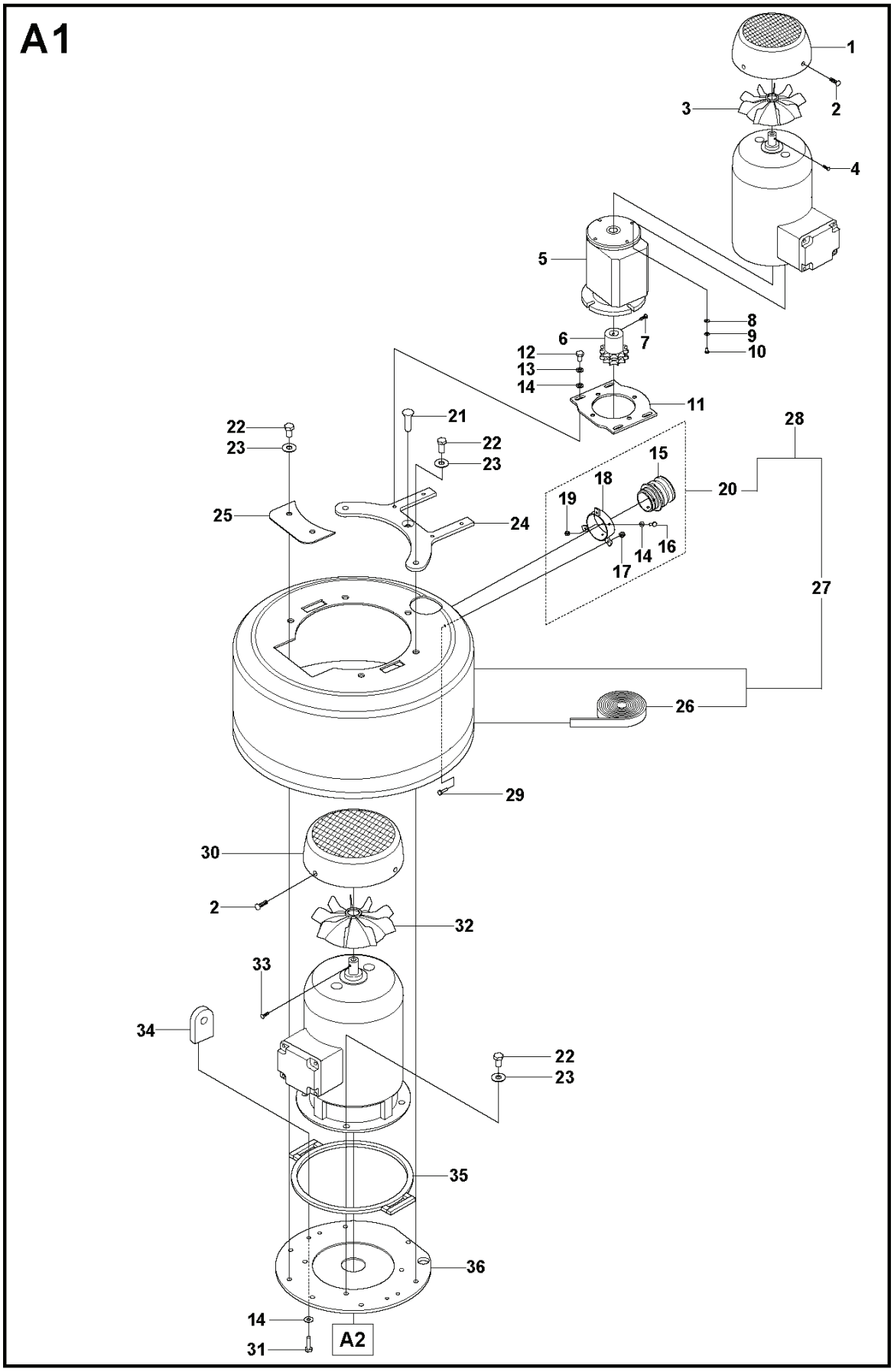
A1
1
2
3
4
5
6
7
8
9
10
11
12
13
14
15
16
17
18
19
20
21
22
23
24
25
26
27
28
29
30
31
32
33
34
35
36
A2

REF.	PART NO.	DESCRIPTION	REMARK	QTY.	KIT
1	522658401	COVER		1	
2	521887101	SCREW		7	
3	522658601	FAN		1	
4	522658501	PEN		1	
5	502559601	GEARBOX		1	
6	502564001	DRIVE SPROCKET		1	
7	541405178	SCREW IHPANM		2	
8	734115201	WASHER		4	
9	735115301	WASHER		4	
10	725237271	SCREW EHHM		4	
11	502561601	PLATE		1	
12	503200045	SCREW EHHFM		4	
13	735116401	SPRING WASHER		4	
14	734116301	WASHER		10	20
15	504729802	COUPLING		1	20
16	725245376	SCREW EHHM		2	20
17	732251601	HEXAGON LOCKING NUT		3	20
18	522658701	BRACKET		1	20
19	732251801	HEXAGON LOCKING NUT		2	20
20	522658801	SERVICE TOOLS		1	28
21	522629401	SUPPORT		1	
22	725253471	SCREW EHHM		10	
23	734117801	WASHER		10	
24	502561501	BRACKET		1	
25	504725101	COVER PLATE		1	
26	502562201	VELCRO		1	27
27	502562101	COVER		1	28
28	522658901	COVER ASSY		1	
29	724337051	SCREW CRCSFM		3	
30a	505556601	COVER	MAIN MOTOR FAN COVER 3KW	1	
30b	522659001	COVER	MAIN MOTOR FAN COVER 4KW	1	
31	725245576	SCREW EHHM		4	
32a	505556501	FAN	MAIN MOTOR FAN 3KW	1	
32b	522659201	FAN	MAIN MOTOR FAN 4KW	1	
33	522659301	PEN		1	
34	504725601	LIFTING LUG		2	
35	522659401	SEAL		1	
36	502561301	PLATE		1	

C6

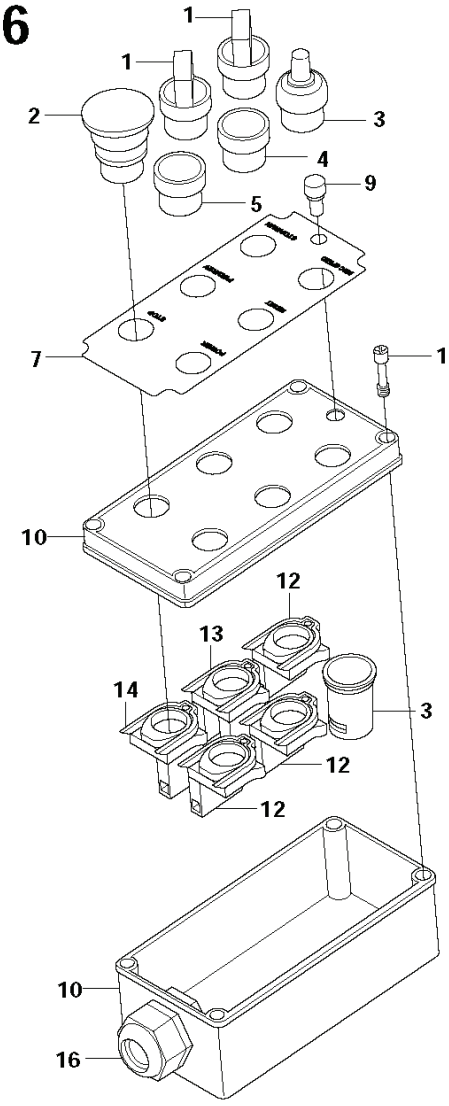

3 Phase

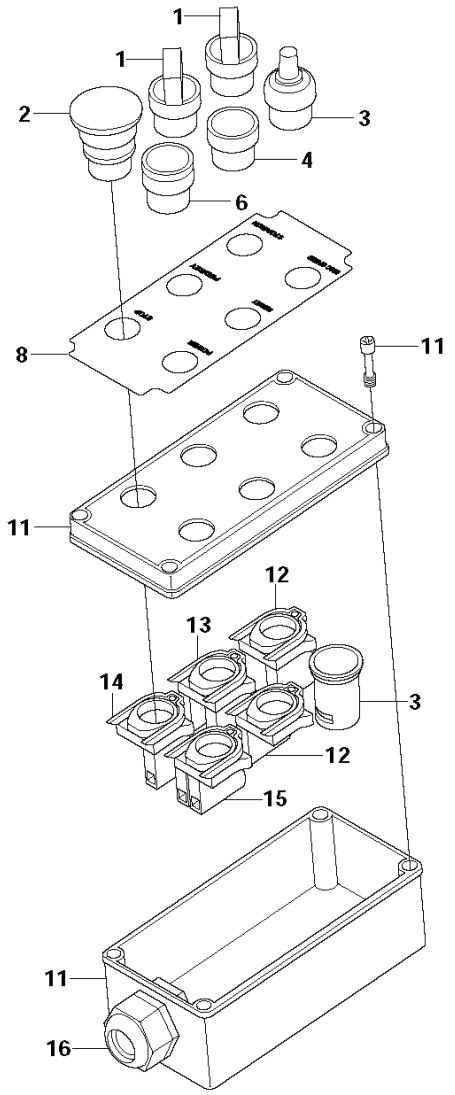

Single Phase

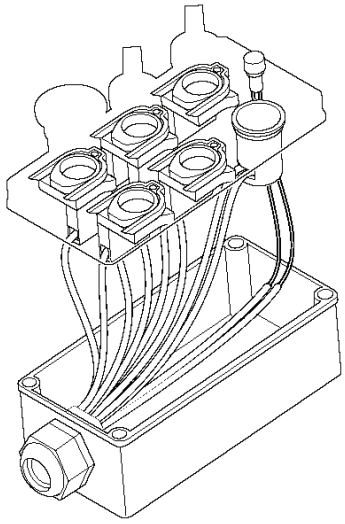

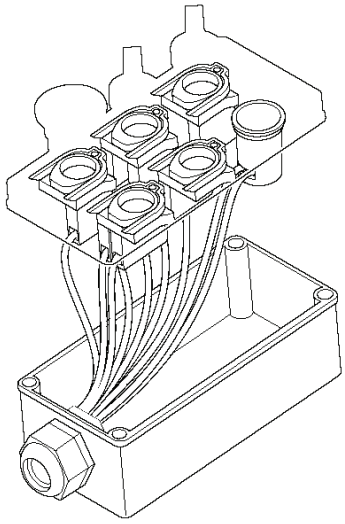

REF.	PART NO.	DESCRIPTION	REMARK	QTY.	KIT
1	504738601	SWITCH		4	
2	504739401	BUTTON		2	
3	502542901	CONTROL		2	
4	504738801	PUSH BUTTON		2	
5	504739001	PUSH BUTTON		1	
6	504755001	PUSH BUTTON		1	
7	522676901	DECAL		1	
8	504755601	DECAL		1	
9	504739601	LAMP		1	
10	522661101	ELECTRIC BOX		1	
11	504754201	ELECTRIC BOX		1	
12	504738901	BUTTON		5	
13	504738701	BUTTON		1	
14	504739501	BUTTON		1	
15	504755101	BUTTON		1	
16	516061801	GROMMET		1	

C5

3 Phase

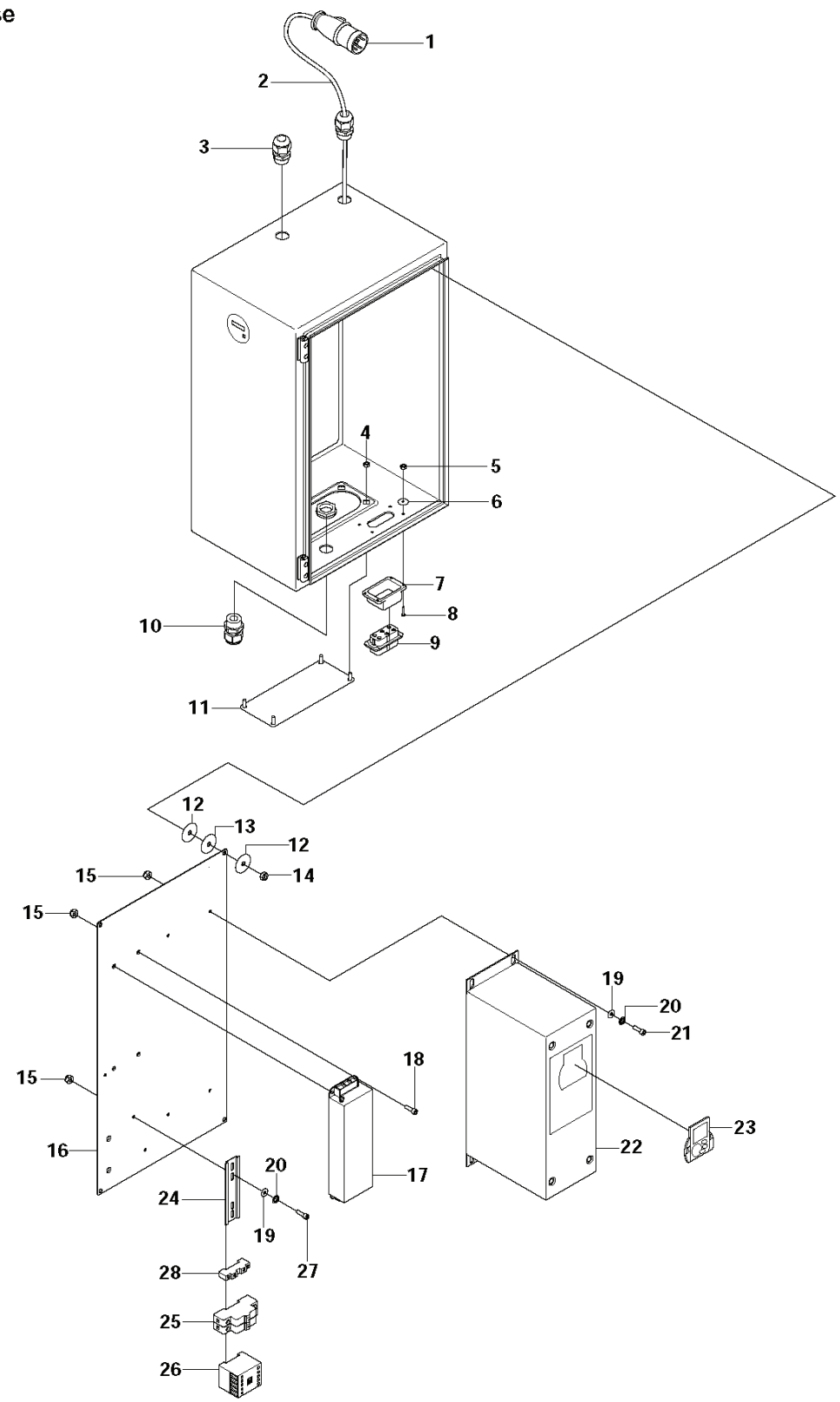
1
2
3
4
5
6
7
8
9
10
11
12
13
12
14
15
15
15
16
17
18
19
20
21
22
23
20
24
19
27
28
25
26

REF.	PART NO.	DESCRIPTION	REMARK	QTY.	KIT
1a	502544001	PLUG	32AMP 4 PIN MALE PLUG - AUS (400V)	1	
1b	515985501	PLUG	32AMP 4 PIN MALE PLUG - CAN (600V)	1	
1c	531117136	PLUG	32AMP 5 PIN MALE PLUG - EU (400V)	1	
1d	515985601	PLUG	63AMP 4 PIN MALE PLUG - JPN/USA (200V)	1	
2	522660901	CABLE		1	
3	516061801	GROMMET		2	
4	732251601	HEXAGON LOCKING NUT		4	
5	732251201	HEXAGON LOCKING NUT		9	
6	734113741	WASHER		10	
7	516060401	HOUSING		1	
8	521887401	SCREW CRPANM		8	
9	516060501	CONNECTOR		1	
10	522660301	GROMMET		1	
11	516060801	PLATE		1	
12	504747301	WASHER		8	
13	516060101	WASHER		4	
14	732251801	HEXAGON LOCKING NUT		4	
15	521886601	RIVET		6	
16	516060901	PLATE		1	
17	522661001	FILTER		1	
18	521886401	SCREW		4	
19	734115201	WASHER		6	
20	735215301	LOCKWASHER		6	
21	725537001	SCREW IHSCM		4	
22	504753201	INVERTER		1	
23a	516061001	PAN	NXL DISPLAY PANEL	1	
23b	505464001	KEYBOARD	NXS DISPLAY PANEL	1	
24	516061101	RAIL		1	
25	504753701	CIRCUIT BREAKER		1	
26	502565301	CONTACTOR		1	
27	541405178	SCREW IHPANM		2	
28	502543801	TERMINAL BLOCK		1	

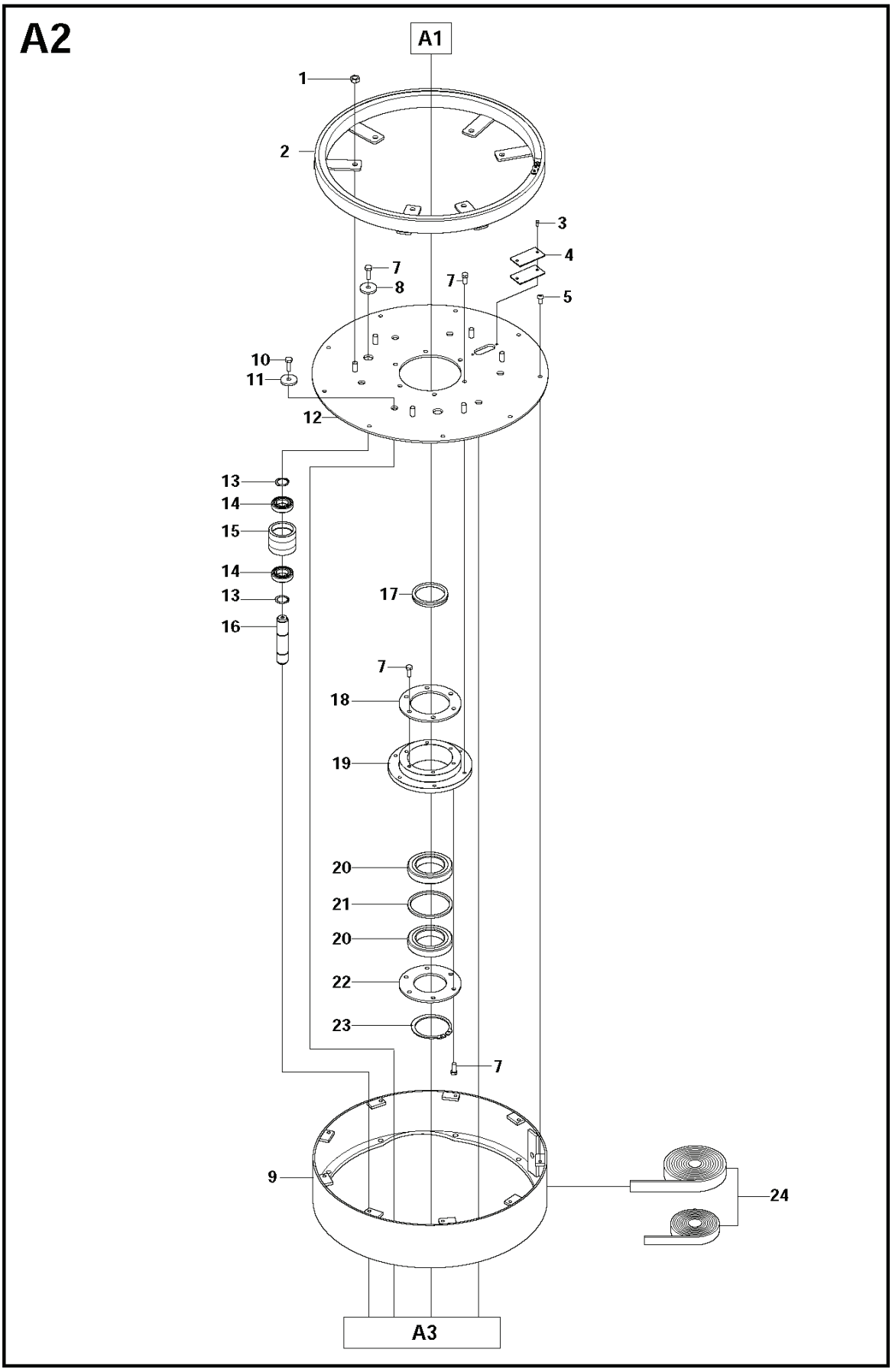
A2
A1
1
2
3
4
7
8
7
5
10
11
12
13
14
15
14
13
16
17
7
18
19
20
21
20
22
23
7
9
24
A3

REF.	PART NO.	DESCRIPTION	REMARK	QTY.	KIT
1	732252001	HEXAGON LOCKING NUT		1	
2	502562301	CHAIN		1	
3	725236671	SCREW EHHM		2	
4	504727901	COVER PLATE		1	
5	516058501	SEAL		1	
6	522619901	SCREW IHPANM		9	
7	725245176	SCREW EHHM		20	
8	504728601	WASHER		2	
9	502562001	RIM		1	
10	522620101	SCREW		6	
11	734118201	WASHER		6	
12	502561101	TOP PLATE		1	
13	735312600	CIRCLIP		2	
15	502560401	PULLEY		1	
16	502560301	SHAFT		2	
17	502539801	SEAL		1	
18	504725001	PLATE		1	
19	502560801	BEARING HOUSING		1	
20	502562601	BALL BEARING		2	
21	504724801	SPACER		1	
22	504724901	PLATE		1	
23	502539601	CIRCLIP		1	
24	502559101	SEAL		1	

B1

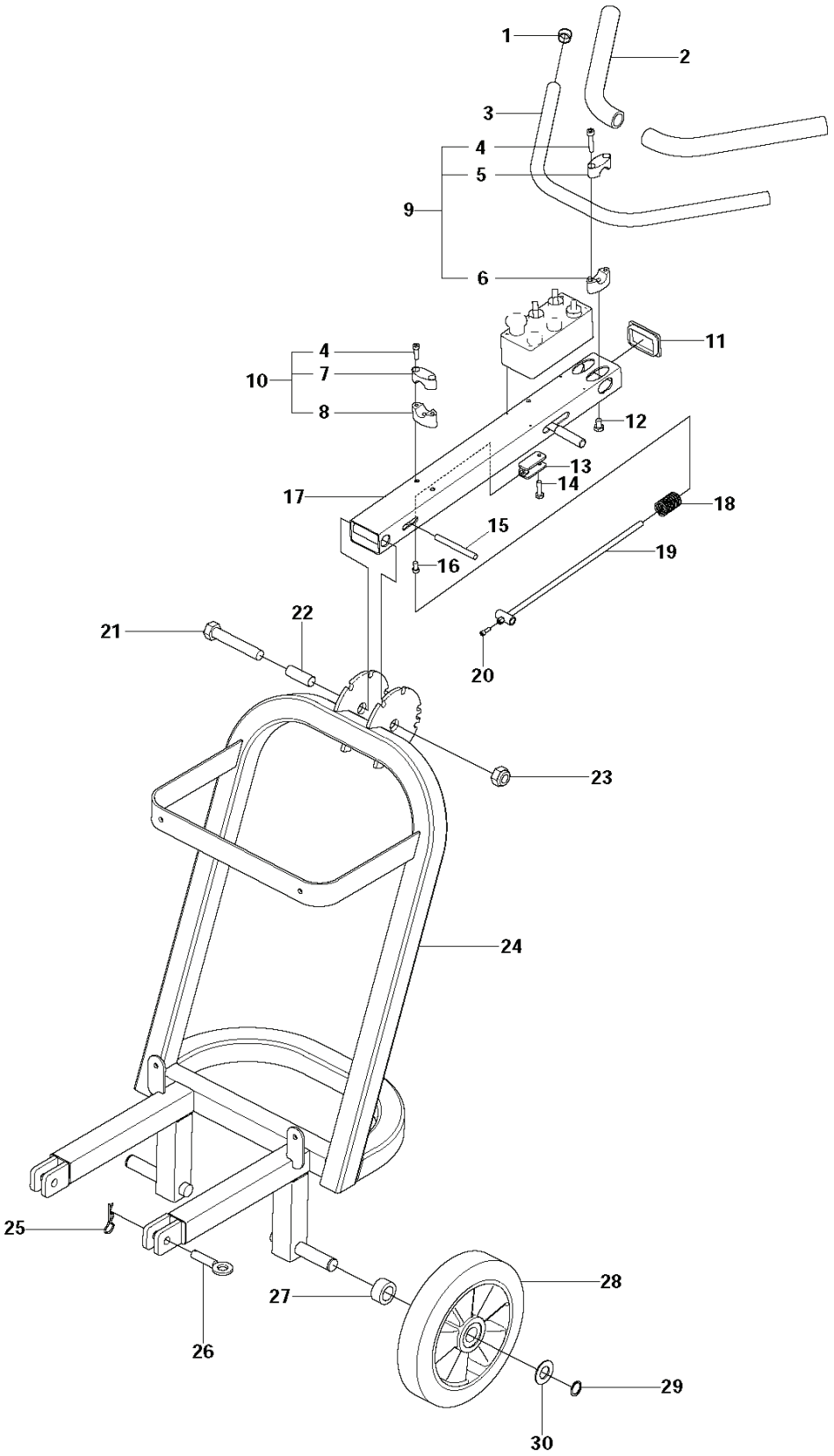
1
2
3
4
5
9
6
11
4
10
7
8
12
13
14
17
18
15
19
16
21
22
20
23
24
25
28
27
26
29
30

REF.	PART NO.	DESCRIPTION	REMARK	QTY.	KIT
1	516058701	HUB CAP		2	
2	502566514	HANDLEBAR		2	
3	502566513	HANDLE TUBE		1	
4	521887501	SCREW		6	9, 10
5	516058801	CLAMP		2	9
6	516058901	CLAMP		2	9
7	516059101	CLAMP		1	10
8	516059201	CLAMP		1	10
9	502544925	HANDLEBAR		2	
10	502544926	HANDLEBAR		1	
11	516059001	HUB CAP		1	
12	725248971	SCREW EHHM		2	
13	502544905	BRACKET		1	
14	725245576	SCREW EHHM		1	
15	516059301	PEN		1	
16	725544501	SCREW IHSCM		2	
17	502566502	HANDLEBAR ASSY		1	
18	502544927	COMPRESSION SPRING		1	
19	522659901	ROD		1	
20	725536601	SCREW IHSCM		1	
21	504750701	SCREW		1	
22	516059701	SLEEVE		1	
23	504750601	LOCK NUT		1	
24	502566401	CHASSIS		1	
25	721680251	SPRING COTTER		2	
26	504729701	PEN		2	
27	504727707	SPACING TUBE		2	
28	502545001	WHEEL		2	
29	735312600	CIRCLIP		2	
30	504751401	WASHER		2	
	PART NO.		REMARK		KIT